FLUKE®

180LR, 180LG

Line Laser Levels

Users Manual

August 2016

© 2016 Fluke Corporation. All rights reserved. Specifications are subject to change without notice.
All product names are trademarks of their respective companies.

LIMITED WARRANTY AND LIMITATION OF LIABILITY

Each Fluke product is warranted to be free from defects in material and workmanship under normal use and service. The warranty period is three years and begins on the date of shipment. Parts, product repairs, and services are warranted for 90 days. This warranty extends only to the original buyer or end-user customer of a Fluke authorized reseller, and does not apply to fuses, disposable batteries, or to any product which, in Fluke's opinion, has been misused, altered, neglected, contaminated, or damaged by accident or abnormal conditions of operation or handling. Fluke warrants that software will operate substantially in accordance with its functional specifications for 90 days and that it has been properly recorded on non-defective media. Fluke does not warrant that software will be error free or operate without interruption.

Fluke authorized resellers shall extend this warranty on new and unused products to end-user customers only but have no authority to extend a greater or different warranty on behalf of Fluke. Warranty support is available only if product is purchased through a Fluke authorized sales outlet or Buyer has paid theE applicable international price. Fluke reserves the right to invoice Buyer for importation costs of repair/replacement parts when product purchased in one country is submitted for repair in another country.

Fluke's warranty obligation is limited, at Fluke's option, to refund of the purchase price, free of charge repair, or replacement of a defective product which is returned to a Fluke authorized service center within the warranty period.

To obtain warranty service, contact your nearest Fluke authorized service center to obtain return authorization information, then send the product to that service center, with a description of the difficulty, postage and insurance prepaid (FOB Destination). Fluke assumes no risk for damage in transit. Following warranty repair, the product will be returned to Buyer, transportation prepaid (FOB Destination). If Fluke determines that failure was caused by neglect, misuse, contamination, alteration, accident, or abnormal condition of operation or handling, including overvoltage failures caused by use outside the product’s specified rating, or normal wear and tear of mechanical components, Fluke will provide an estimate of repair costs and obtain authorization before commencing the work. Following repair, the product will be returned to the Buyer transportation prepaid and the Buyer will be billed for the repair and return transportation charges (FOB Shipping Point).

THIS WARRANTY IS BUYER'S SOLE AND EXCLUSIVE REMEDY AND IS IN LIEU OF ALL OTHER WARRANTIES, EXPRESS OR IMPLIED, INCLUDING BUT NOT LIMITED TO ANY IMPLIED WARRANTY OF MERCHANTABILITY OR FITNESS FOR A PARTICULAR PURPOSE. FLUKE SHALL NOT BE LIABLE FOR ANY SPECIAL, INDIRECT, INCIDENTAL OR CONSEQUENTIAL DAMAGES OR LOSSES, INCLUDING LOSS OF DATA, ARISING FROM ANY CAUSE OR THEORY.

Since some countries or states do not allow limitation of the term of an implied warranty, or exclusion or limitation of incidental or consequential damages, the limitations and exclusions of this warranty may not apply to every buyer. If any provision of this Warranty is held invalid or unenforceable by a court or other decision-maker of competent jurisdiction, such holding will not affect the validity or enforceability of any other provision.

Fluke Corporation
P.O. Box 9090
Everett, WA 98206-9090
U.S.A.

Fluke Europe B.V.
P.O. Box 1186
5602 BD Eindhoven
The Netherlands

11/99

Table of Contents

Title	Page
Introduction	1
How to Contact Fluke	1
Safety Information	1
Product Familiarization	3
Alignment	4
New Horizontal or Diagonal Alignment	4
New Vertical Alignment	5
Existing Item Alignment	5
Check Product Accuracy	6
Check Accuracy of Horizontal Laser	6
Check Accuracy of Vertical Laser	8
Maintenance	10
Clean the Product	10
Batteries	10
Specifications	10

Introduction

The 180LR and 180LG Line Laser Levels (the Product) are battery-powered, self-leveling, professional grade instruments. Use the Product to layout reference points to align targets horizontally, vertically, or diagonally. The 180R emits either a solid or pulsed red laser beam. The 180G emits either a solid or pulsed green laser beam. The solid laser beams are for use indoors. The pulsed laser beams are for use outdoors with the Fluke LDR or LDG Laser Detector.

Note

The pulsed laser beams are not as bright as the solid laser beams. If the laser beam is difficult to see, use either the Fluke LDR or LDG Laser Detector to accurately determine the location of the laser. See the LDR, LDG Users Manual*.*

How to Contact Fluke

To contact Fluke, call one of the following telephone numbers:

- Technical Support USA: 1-800-44-FLUKE (1-800-443-5853)
- Calibration/Repair USA: 1-888-99-FLUKE (1-888-993-5853)
- Canada: 1-800-36-FLUKE (1-800-363-5853)
- Europe: +31 402-675-200
- Japan: +81-3-6714-3114
- Singapore: +65-6799-5566
- Anywhere in the world: +1-425-446-5500

Or, visit Fluke's website at www.fluke.com.

To register your product, visit http://register.fluke.com.

To view, print, or download the latest manual supplement, visit http://us.fluke.com/usen/support/manuals.

Safety Information

A **Warning** identifies conditions and actions that pose hazards to the user; a **Caution** identifies conditions and actions that may damage the Product or the equipment under test.

⚠⚠ Warning

To prevent eye damage and personal injury:

- **Read all safety information before you use the Product.**
- **Carefully read all instructions.**
- **Use the Product only as specified or hazardous laser radiation exposure can occur.**
- **Use the Product only as specified, or the protection supplied by the Product can be compromised.**

- **Do not look directly into the laser with optical tools (for example, binoculars, telescopes, microscopes). Optical tools can focus the laser and be dangerous to the eye.**
- **Do not look into the laser. Do not point laser directly at persons or animals or indirectly off reflective surfaces.**
- **Do not use the Product if it operates incorrectly.**
- **Remove the batteries if the Product is not used for an extended period of time, or if stored in temperatures above 50 °C. If the batteries are not removed, battery leakage can damage the Product.**

Table 1 is a list of the symbols used on the Product or in this manual.

Table 1. Symbols

Symbol	Description	Symbol	Description
⚠	WARNING. RISK OF DANGER.		Certified by CSA Group to North American safety standards.
	Consult user documentation.	CE	Conforms to European Union directives.
	WARNING. LASER RADIATION. Risk of eye damage.		Conforms to relevant Australian Safety and EMC standards.
	Battery or battery compartment.		Conforms to relevant South Korean EMC Standards.
	This product complies with the WEEE Directive marking requirements. The affixed label indicates that you must not discard this electrical/electronic product in domestic household waste. Product Category: With reference to the equipment types in the WEEE Directive Annex I, this product is classed as category 9 "Monitoring and Control Instrumentation" product. Do not dispose of this product as unsorted municipal waste.		
	Indicates a Class 3R laser. AVOID DIRECT EYE EXPOSURE The following text may appear with the symbol on the product label: “IEC/EN 60825-1. Complies with 21 CFR 1040.10 and 1040.11 except for deviations pursuant to Laser Notice 50, dated June 24, 2007.” In addition, the following pattern on the label will indicate wavelength and optical power: λ = xxxnm, x.xxmW.		

Product Familiarization

Figure 1 and Table 2 show the features of the Product.

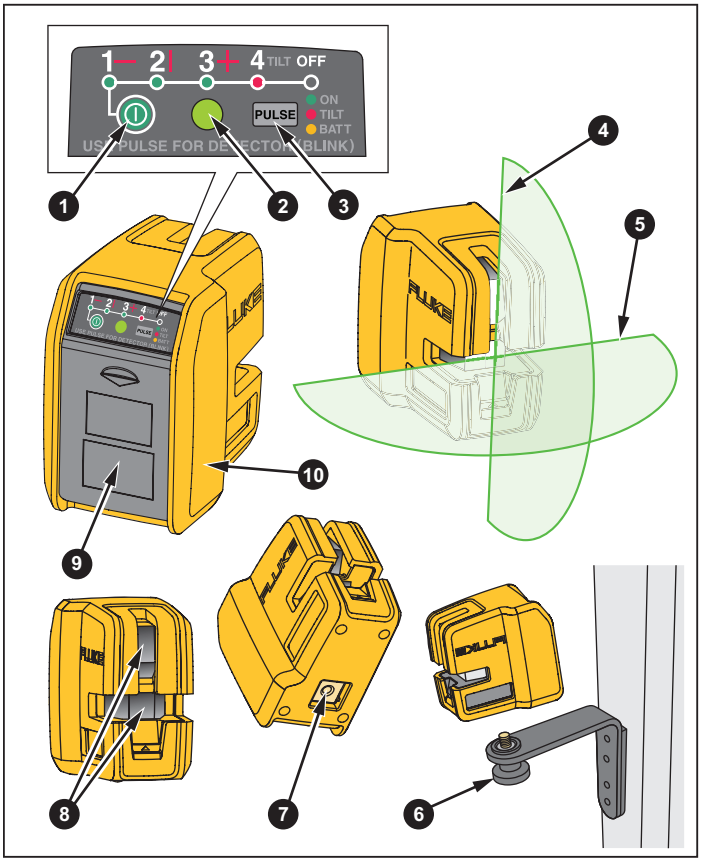

Figure 1. Product Features

Table 2. Product Features

Item	Description
1	Power button Push to scroll through the laser options. 1X - Horizontal laser on 2X - Vertical laser on 3X - Both lasers on, self-level 4X - Both lasers on, manual level 5X - Off
2	Indicator LED Solid Green - On and level, solid laser Blinking Green - On and level, pulsed laser Red - Tilt, the Product is not level or the Product is in manual level mode. Yellow - Battery low
3	Pulse button Push to pulse the laser
4	Vertical laser
5	Horizontal laser
6	Wall bracket

Table 2. Product Features (cont.)

Item	Description
7	Accessory mount
8	Optical windows
9	Batter door
10	Holster
--	Soft case (not shown)

Alignment

New Horizontal or Diagonal Alignment

To identify new level and grade marks:

Note

Use the Product in manual level mode to find diagonal alignment.

1. Put the bottom of the Product on a stable surface.
2. Turn the Product around on its center until the horizontal laser points to the target area. See Figure 2.
3. Put marks at the level or grade point on the target area.

Note

When the Product is mounted on a tripod, make sure the tripod head is perfectly level. Errors in marks can result if a tripod is out of level.

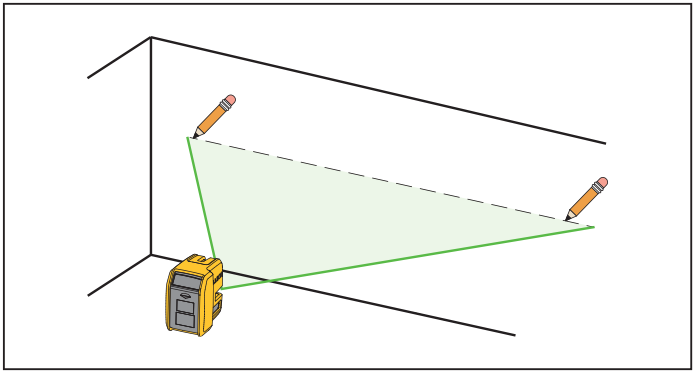

Figure 2. New Horizontal or Diagonal Mark

New Vertical Alignment

To identify new marks that are vertically aligned:

1. Put the Product facing the target and turn on the vertical laser. See Figure 3.
2. Put marks at the point where the vertical laser intersects the target area.

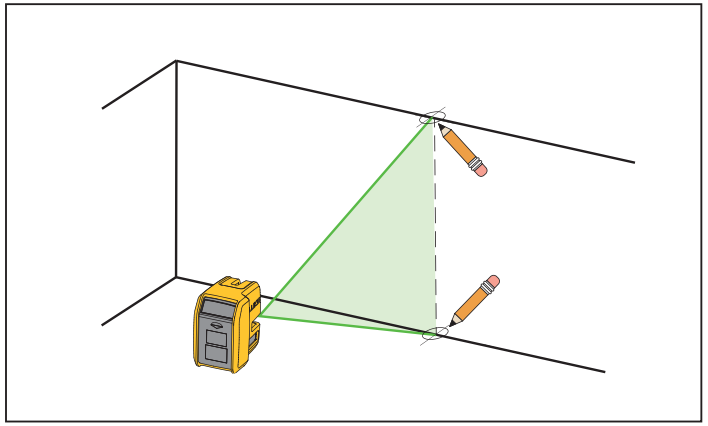

Figure 3. New Vertical Mark

Existing Item Alignment

To determine if an existing item is aligned:

1. Point the horizontal or vertical laser at the target area.
2. Measure the distance from the item to the laser. See Figure 4.
3. Repeat step 2 at various distances from the Product.

   If the measurements are the same from each distance from the Product, the condition is aligned.

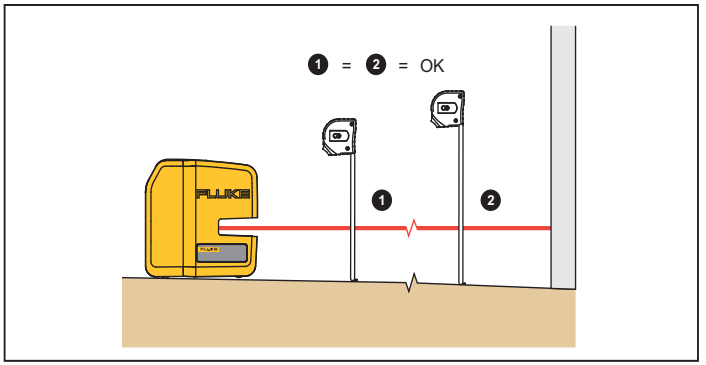

Figure 4. Existing Item Alignment

Check Product Accuracy

Periodically check the accuracy of the Product.

Check Accuracy of Horizontal Laser

To check the accuracy of the horizontal laser:

1. Find a horizontal site that is almost level, preferably a concrete slab, that is ≥7.62 m (25 ft) wide with two opposing walls to use as targets. You can also use scrap wood as targets. See Figure 5.
2. Put the Product about 15 cm (6 in) from target A.
3. Point the horizontal laser at target A.
4. Put a mark 1 at the point where the horizontal laser intersects the target area.
5. Turn the Product 180 ° on its center so that the horizontal laser intersects with target B.
6. Put a mark 2 at the point where the horizontal laser intersects the target area.
7. Repeat steps 2 through 6 with the Product 15 cm from target B.
8. Measure the distance between mark 1 and mark 3 on target A and mark 2 and mark 4 on target B.

   If the distances are the same, the laser is within calibration.
9. If the distances are not the same, subtract the lesser measurement from the greater measurement and divide by two to calculate the difference of error.

   If the distance is ≤3 mm @ 9 m, the laser is within calibration accuracy.

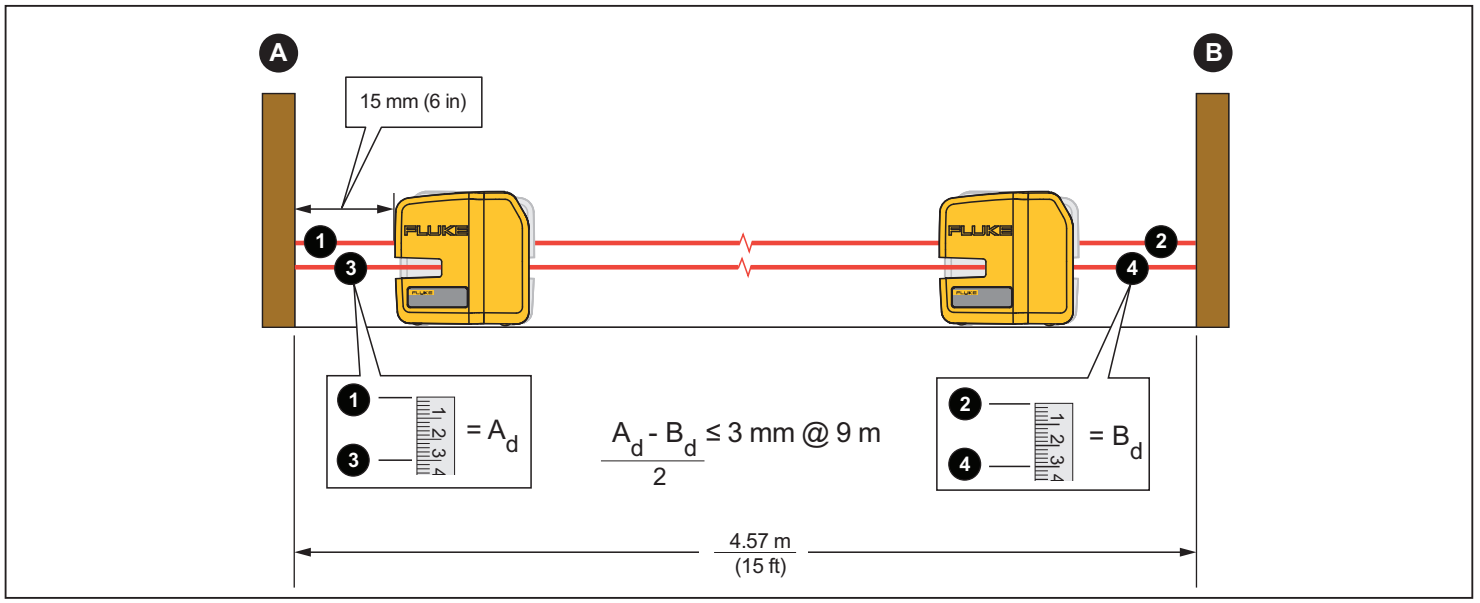

Figure 5. Horizontal Laser Accuracy

Check Accuracy of Vertical Laser

To check the accuracy of the vertical laser:

1. Find a door jamb that has 2.44 m (8 ft) clearance on both sides of the door.
2. Put a cross mark (mark **1**) on the floor centered on the door header. See Figure 6.
3. Put a second cross mark (mark **2**) 2.44 m (8 ft) from mark **1**. Use the vertical laser to make sure that mark **2** is centered on the door header and intersects mark **1**.
4. Put the Product on mark **2** with the vertical laser on.
5. Put a third cross mark (mark **3**) on the floor 4.88 m (16 ft) from the Product. Use the vertical laser to make sure that mark **3** is centered on the door header and intersects mark **1**.
6. Put a cross mark ❶ on the door header above mark **1**.
7. Move the Product to mark **3** and align the laser so that it intersects the centers of marks **1** and **2**.
8. Put another cross mark ❷ on the door header above mark **1**.

   If the first and second cross marks on the door header are the same, the laser calibration is accurate.
9. If the cross marks are not the same, measure the distance between the center points of the two cross marks.

   If the distance is ≤1.58 mm, the laser is within calibration accuracy.

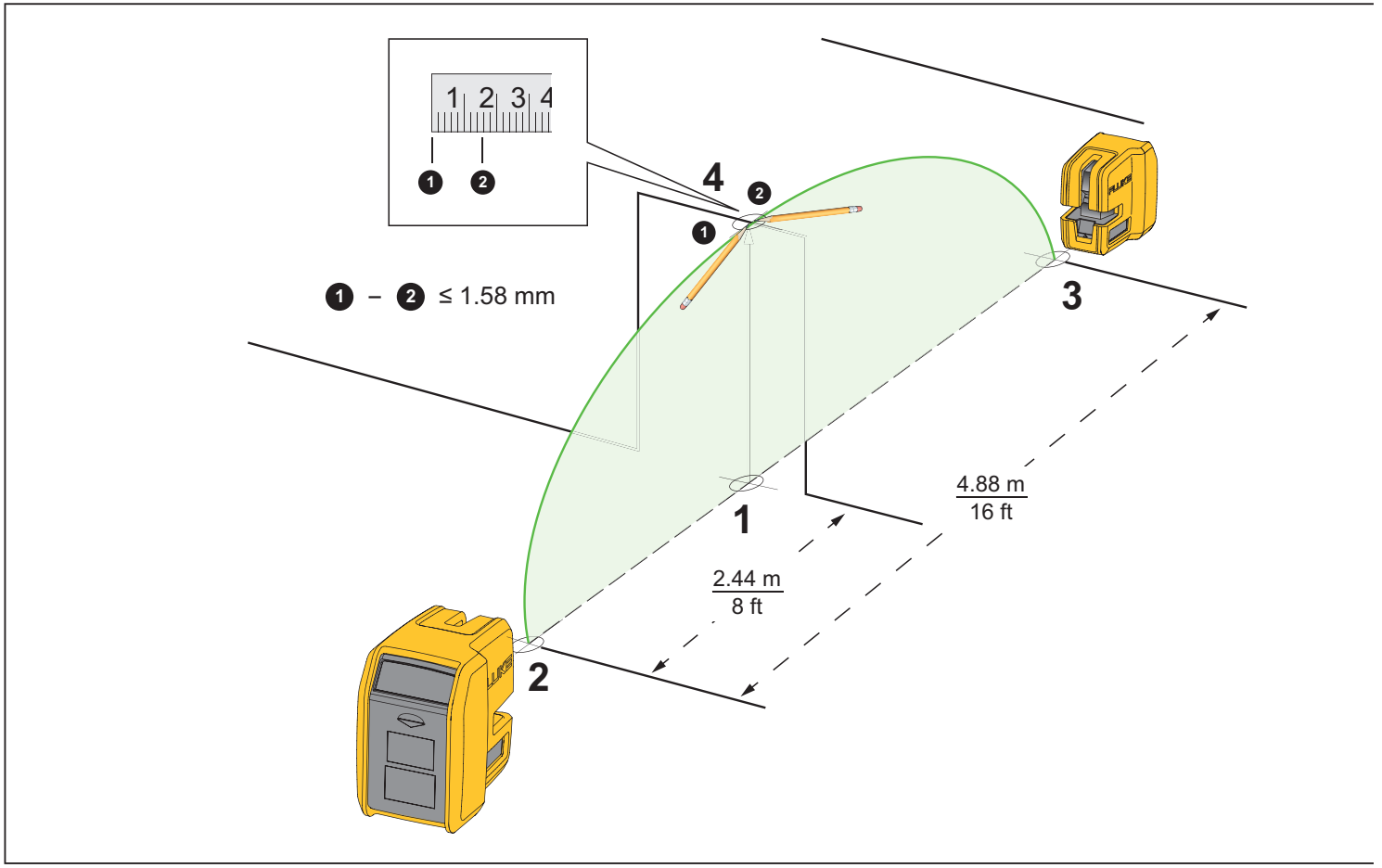

Figure 6. Vertical Laser Accuracy

Maintenance

The Product does not require maintenance but treat the Product as a calibrated instrument. Do not drop the Product.

⚠⚠ Warning

To prevent eye damage and personal injury, do not open the Product. The laser beam is dangerous to the eyes. Have the Product repaired only through an approved technical site.

Clean the Product

Clean the case with a damp cloth and a weak soap solution. Do not use abrasives, isopropyl alcohol, or solvents to clean the case or optic windows.

Batteries

Replace the batteries when the indicator LED is yellow.

To install or replace the batteries (See Figure 7.):

1. Remove the battery compartment lid.
2. Install three AA batteries with the correct polarity.
3. Replace the battery compartment lid.

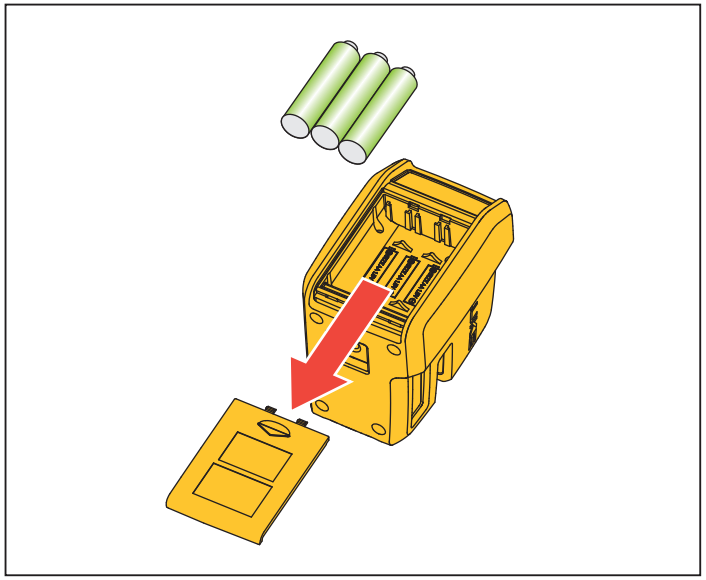

Figure 7. Battery Replacement

Specifications

Light Source.....Semiconductor laser diode
Working Range.....≤60 m
Accuracy.....≤3 mm @ 9 m
Leveling .....Automatic
Leveling Range .....≤6 °

Power

Batteries ..... 3 x AA Alkaline IEC LR6

Battery Life

Red..... ≥35 hrs, continuous use with single beam

Green ..... 2 hrs to 6 hrs, continuous use with single beam

Dimensions (H x W x L)..... 93 mm x 61 mm x 93 mm

Weight (with batteries) ..... 0.50 kg

Temperature

Operating ..... -18 °C to +50 °C

Storage..... -40 °C to +70 °C
with battery: -20 °C to +50 °C

Relative Humidity ..... 0 % to 90 % (0 °C to 35 °C)
0 % to 75 % (35 °C to 40 °C)
0 % to 45 % (40 °C to 50 °C)

Altitude

Operating ..... 2000 m

Storage..... 12 000 m

Safety

General ..... IEC 61010-1: Pollution Degree 2

Laser ..... IEC 60825-1: Class 3R

Max output power..... <5 mW

Wavelength

Red ..... 635 nm

Green ..... 510 nm

Electromagnetic Compatibility (EMC)

International .....IEC 61326-1: Industrial Electromagnetic Environment

CISPR 11: Group 1, Class A

Group 1: Equipment has intentionally generated and/or uses conductively-coupled radio frequency energy that is necessary for the internal function of the equipment itself.

Class A: Equipment is suitable for use in all establishments other than domestic and those directly connected to a low-voltage power supply network that supplies buildings used for domestic purposes. There may be potential difficulties in ensuring electromagnetic compatibility in other environments due to conducted and radiated disturbances.

Korea (KCC) .....Class A Equipment (Industrial Broadcasting & Communication Equipment)

Class A: Equipment meets requirements for industrial electromagnetic wave equipment and the seller or user should take notice of it. This equipment is intended for use in business environments and not to be used in homes.

USA (FCC).....47 CFR 15 subpart B. This product is considered an exempt device per clause 15.103.