FLUKE®

729/729 FC

Automatic Pressure Calibrator

Calibration Manual

BC July 2017 Rev. 1, 3/20
© 2017-2020 Fluke Corporation. All rights reserved. Specifications are subject to change without notice.
All product names are trademarks of their respective companies.

LIMITED WARRANTY AND LIMITATION OF LIABILITY

Each Fluke product is warranted to be free from defects in material and workmanship under normal use and service. The warranty period is three years and begins on the date of shipment. Parts, product repairs, and services are warranted for 90 days. This warranty extends only to the original buyer or end-user customer of a Fluke authorized reseller, and does not apply to fuses, disposable batteries, or to any product which, in Fluke's opinion, has been misused, altered, neglected, contaminated, or damaged by accident or abnormal conditions of operation or handling. Fluke warrants that software will operate substantially in accordance with its functional specifications for 90 days and that it has been properly recorded on non-defective media. Fluke does not warrant that software will be error free or operate without interruption.

Fluke authorized resellers shall extend this warranty on new and unused products to end-user customers only but have no authority to extend a greater or different warranty on behalf of Fluke. Warranty support is available only if product is purchased through a Fluke authorized sales outlet or Buyer has paid the applicable international price. Fluke reserves the right to invoice Buyer for importation costs of repair/replacement parts when product purchased in one country is submitted for repair in another country.

Fluke's warranty obligation is limited, at Fluke's option, to refund of the purchase price, free of charge repair, or replacement of a defective product which is returned to a Fluke authorized service center within the warranty period.

To obtain warranty service, contact your nearest Fluke authorized service center to obtain return authorization information, then send the product to that service center, with a description of the difficulty, postage and insurance prepaid (FOB Destination). Fluke assumes no risk for damage in transit. Following warranty repair, the product will be returned to Buyer, transportation prepaid (FOB Destination). If Fluke determines that failure was caused by neglect, misuse, contamination, alteration, accident, or abnormal condition of operation or handling, including overvoltage failures caused by use outside the product's specified rating, or normal wear and tear of mechanical components, Fluke will provide an estimate of repair costs and obtain authorization before commencing the work. Following repair, the product will be returned to the Buyer transportation prepaid and the Buyer will be billed for the repair and return transportation charges (FOB Shipping Point).

THIS WARRANTY IS BUYER'S SOLE AND EXCLUSIVE REMEDY AND IS IN LIEU OF ALL OTHER WARRANTIES, EXPRESS OR IMPLIED, INCLUDING BUT NOT LIMITED TO ANY IMPLIED WARRANTY OF MERCHANTABILITY OR FITNESS FOR A PARTICULAR PURPOSE. FLUKE SHALL NOT BE LIABLE FOR ANY SPECIAL, INDIRECT, INCIDENTAL OR CONSEQUENTIAL DAMAGES OR LOSSES, INCLUDING LOSS OF DATA, ARISING FROM ANY CAUSE OR THEORY.

Since some countries or states do not allow limitation of the term of an implied warranty, or exclusion or limitation of incidental or consequential damages, the limitations and exclusions of this warranty may not apply to every buyer. If any provision of this Warranty is held invalid or unenforceable by a court or other decision-maker of competent jurisdiction, such holding will not affect the validity or enforceability of any other provision.

Fluke Corporation
P.O. Box 9090
Everett, WA 98206-9090
U.S.A.

Fluke Europe B.V.
P.O. Box 1186
5602 BD Eindhoven
The Netherlands

ООО «Флюк СИАИЭС»
125167, г. Москва,
Ленинградский проспект дом 37,
корпус 9, подъезд 4, 1 этаж

11/99

Table of Contents

Title	Page
Introduction	1
Contact Fluke	1
Safety	2
Specifications	2
Pressure Specification	2
Electrical Specification	2
Product Models	3
Mechanical Specification	4
Environmental Specification	4
Safety	4
Performance Verification Tests	5
Verification Equipment	5
How to Verify	6
Verification Procedures	6
Pressure Verification	6
DC Voltage Measure Verification	10
DC Current Measure Verification	11
DC Current Source Verification	13
RTD Measure Verification	14
24V Loop Power Performance Check	15
Calibration Adjustment	16
Calibration Data	16
Service Center Calibration or Repair	16
Manual Process (Front Panel)	16
Electronic Calibration Process (Remote)	17
Adjust Pressure	17
Adjust Voltage Input	23
Adjust mA Input	24
Adjust mA Source	25
Adjust RTD	26
Adjust Continuity	27
Calibration Remote Commands	29
Serial Commands	32
General	32
Internal Pressure	35
Electrical Functions	37

750P Pressure Module 40
HART Function 41
The Battery 45
Charge the Battery 45
Battery Life 46
Battery Replacement 46
Maintenance 48
Clean the Product 48
Clean the Pump Valve 48
Replace the Pump Filters 49
In Case of Difficulty 50
Update Product Firmware 50
User-Replaceable Parts and Accessories 51

Introduction

This manual contains information necessary to do performance verification tests and calibration adjustments on your 729 and 729 FC Automatic Pressure Calibrators (the Product).

Contact Fluke

To contact Fluke, call one of the following telephone numbers:

- Technical Support USA: 1-800-44-FLUKE (1-800-443-5853)
- Calibration/Repair USA: 1-888-99-FLUKE (1-888-993-5853)
- Canada: 1-800-36-FLUKE (1-800-363-5853)
- Europe: +31 402-675-200
- Japan: +81-3-6714-3114
- China: +86-400-921-0835
- Singapore: +65-6799-5566
- Brazil: +55-11-3530-8901
- Anywhere in the world: +1-425-446-5500

Or, visit Fluke's website at www.fluke.com.

To register your product, visit http://register.fluke.com.

To view, print, or download the latest manual supplement, visit http://us.fluke.com/usen/support/manuals.

The latest software trial version of *DPCTrack2* can be downloaded at www.fluke.com/productinfo. For more information, see *Update Product Firmware*.

Safety

General Safety Information is in the printed Safety Information document that ships with the Product and at www.fluke.com. More specific safety information is listed where applicable.

Specifications

Pressure Specification

1-year Specification	0.02 % of full scale
Control Specification	0.005 % full scale minimum
Temperature Compensation	15 °C to 35 °C (59 °F to 95 °F) to rated accuracy Note: For temperatures from -10 °C to +15 °C and 35 °C to 50 °C, add 0.04 % of full scale

Electrical Specification

All specifications are valid to 110 % of range, except 24 mA source and simulate which are valid to 100 % of range.

Ranges

mA	0 mA to 24 mA
Volts	0 V dc to 30 V dc

Resolution

mA Ranges	1 µA
Voltage Range	1 mV
Accuracy	0.01 % ±2 LSD all ranges (at 23 °C ±5 °C)
Temperature Compensation	20 ppm of full scale /°C from -10 °C to +18 °C and 28 °C to 50 °C
Loop Compliance Voltage	24 V dc @ 20 mA
mA Simulate External Voltage Requirement	12 V dc to 30 V dc
Temperature Measurement	
Only/100 Ω Pt (385) RTD	-50 °C to +150 °C (-58 °F to +302 °F)
Temperature Resolution	0.01 °C (0.01 °F)
Temperature Accuracy	±0.1 °C (0.2 °F) (±0.25 °C ±0.45 °F) combined uncertainty when using 720 RTD probe (optional accessory)
Drive Capability	1200 Ω without HART resistor, 950 Ω with internal HART resistor

Product Models

Model	psi Range, Resolution	bar Range, Resolution	kPa Range, Resolution	Comment
729 30G	-12.0000 psi to +30.0000 psi	-0.82737 bar to +2.06842 bar	-82.737 kPa to +206.843 kPa	No wireless communication Dry air and non-corrosive gas only
729 150G	-12.000 psi to +150.000 psi	-0.8273 bar to +10.3421 bar	-82.73 kPa to +1034.21 kPa	
729 300G	-12.000 psi to +300.000 psi	-0.8273 bar to +20.6843 bar	-82.73 kPa to +2068.43 kPa	
729 30G FC	-12.0000 psi to +30.0000 psi	-0.82737 bar to +2.06842 bar	-82.737 kPa to +206.843 kPa	Wireless communication for Fluke Connect Dry air and non-corrosive gas only
729 150G FC	-12.000 psi to +150.000 psi	-0.8273 bar to +10.3421 bar	-82.73 kPa to +1034.21 kPa	
729 300G FC	-12.000 psi to +300.000 psi	-0.8273 bar to +20.6843 bar	-82.73 kPa to +2068.43 kPa	
729CN 200K	-12.0000 psi to +30.0000 psi	-0.82737 bar to +2.06842 bar	-82.737 kPa to +206.843 kPa	For China, no wireless communication Dry air and non-corrosive gas only
729CN 1M	-12.000 psi to +150.000 psi	-0.8273 bar to +10.3421 bar	-82.73 kPa to +1034.21 kPa	
729CN 2M	-12.000 psi to +300.000 psi	-0.8273 bar to +20.6843 bar	-82.73 kPa to +2068.43 kPa	
729CN 200K FC	-12.0000 psi to +30.0000 psi	-0.82737 bar to +2.06842 bar	-82.737 kPa to +206.843 kPa	For China, wireless communication for Fluke Connect Dry air and non-corrosive gas only
729CN 1M FC	-12.000 psi to +150.000 psi	-0.8273 bar to +10.3421 bar	-82.73 kPa to +1034.21 kPa	
729CN 2M FC	-12.000 psi to +300.000 psi	-0.8273 bar to +20.6843 bar	-82.73 kPa to +2068.43 kPa	
729JP 200K	N/A	N/A	-82.737 kPa to +206.843 kPa	For Japan, no wireless communication Dry air and non-corrosive gas only
729JP 1M	N/A	N/A	-82.73 kPa to +1034.21 kPa	For Japan, 1 MPa range, no wireless communication Dry air and non-corrosive gas only
729JP 2M	N/A	N/A	-82.73 kPa to +2068.43 kPa	For Japan, 2 MPa range, no wireless communication Dry air and non-corrosive gas only
729JP 200K FC	N/A	N/A	-82.737 kPa to +206.843 kPa	For Japan, wireless communication Dry air and non-corrosive gas only
729JP 1M FC	N/A	N/A	-82.73 kPa to +1034.21 kPa	
729JP 2M FC	N/A	N/A	-82.73 kPa to +2068.43 kPa	

Mechanical Specification

Size (H x W x L)	7.0 cm x 27.9 cm x 17.3 cm (2.75 in x 11.0 in x 6.8 in)
Weight	2.95 kg (6.5 lb)

Environmental Specification

Operating Temperature	-10 °C to +50 °C for measurement, 0 °C to 50 °C for pressure control Battery will only charge from 0 °C to 40 °C
Operating Temperature with Battery	-10 °C to +40 °C
Storage Temperature	-20 °C to +60 °C
Operating Altitude	3000 m
Storage Altitude	13 000 m
Operating Humidity	Non condensing (<10 °C) ≤90 % RH (at 10 °C to 30 °C) ≤75 % RH (at 30 °C to 40 °C) ≤45 % RH (at 40 °C to 50 °C)

Safety

General	IEC 61010-1, Pollution Degree 2, IEC 61010-2-030: 30 V max
Ingress Protection	IEC 60529: IP54 (with all port seals properly fitted)
Lithium Battery	IEC 62133, UN 38.3; 14.4 V, 6.7Ah, 97Wh, 4ICR19/66-2 (4s2p) Charge input 19.5 V, 1.6 A.

Electromagnetic Compatibility (EMC)

International: IEC 61326-1: Basic Electromagnetic Environment; CISPR 11: Group 1, Class A

Group 1: Equipment has intentionally generated and/or uses conductively-coupled radio frequency energy that is necessary for the internal function of the equipment itself.

Class A: Equipment is suitable for use in all establishments other than domestic and those directly connected to a low-voltage power supply network that supplies buildings used for domestic purposes. There may be potential difficulties in ensuring electromagnetic compatibility in other environments due to conducted and radiated disturbances.

Caution: This equipment is not intended for use in residential environments and may not provide adequate protection to radio reception in such environments.

Korea (KCC)..... Class A Equipment (Industrial Broadcasting & Communication Equipment)

Class A: Equipment meets requirements for industrial electromagnetic wave equipment and the seller or user should take notice of it. This equipment is intended for use in business environments and not to be used in homes.

USA (FCC) ..... 47 CFR 15 subpart B. This product is considered an exempt device per clause 15.103 (non FC versions only)

Radio Certification ..... (Contains) FCC ID: T68-FBLE, IC: 6627A-FBLE

Frequency ..... 2402 MHz to 2480 MHz

Output Power ..... <100 mW

Performance Verification Tests

Fluke recommends re-certification each year. To re-certify, do the verification procedure. If test points are out of tolerance, calibrate the Product and then re-verify.

Use the subsequent tests to make sure that the Product is inside its specification limits.

Verification Equipment

The equipment necessary for verification of the Product is shown in Table 1. If these instruments are not available, you can replace them with other source and measure instruments that have the same the minimum specification requirements.

Table 1. Equipment Required for Verification and Calibration Adjustment

Equipment	Minimum Specifications	Recommended Model
DC Calibrator	DC Voltage: 0 V to 30 V Accuracy: ±0.002 % +0.5 mV DC Current 0 mA to 24 mA Accuracy: ±0.002 % +0.5 µA	Fluke 5522A Multi-Product Calibrator
Digital Multimeter	DC Current: 0 mA to 26 mA Accuracy: ±0.002 % +0.5 µA	Fluke 8508A
Pressure Controller/Calibrator	-14 psi to 300 psi Accuracy: 0.005 %	Ruska 7252xi
RTD adapter		Fluke 720URTDA

How to Verify

For each procedure there is a table of test points and permitted readings. If the result of the test is not in the range shown, the Unit Under Test (UUT) is out of tolerance and must be re-calibrated or repaired if necessary. There are columns for 12-month specifications.

Follow these general instructions for all the tests:

- Operate the Unit Under Test (UUT) on battery power. Make sure the battery is fully charged.
- Let each piece of verification equipment have its specified warm-up time.

Verification Procedures

Allow the Product a 30-minute warm-up period before doing the verification procedures.

Pressure Verification

To verify the pressure function:

1. Carefully attach the pressure fitting of the Pressure Controller/Calibrator to the pressure port of the Product.
2. Put the Product in measure mode.
3. Source full scale pressure (300 psi for the 300 model, 150 psi for the 150 model, and 30 psi for 30 the model) from the calibrator (7252). Hold for at least 1 minute.
4. Source 0 psi from the calibrator.
5. ZERO the Product pressure reading when its reading has stabilized.
6. Test all positive pressure test points in ascending and descending order.
7. Source -12 psi from the calibrator. Hold for at least 1 minute.
8. Source 0 psi from the calibrator.
9. ZERO the Product pressure reading when its reading has stabilized.
10. Test all pressure test points in Table 2 for the 729 pressure range in ascending and descending order.

Table 2. Pressure Verification Points

Input Pressure (psi)	12 Month Lower Limit	12 Month Upper Limit
729 30G/729FC 30G		
-12.0000	-12.0060	-11.9940
-9.0000	-9.0060	-8.9940
-6.0000	-6.0060	-5.9940
-3.0000	-3.0060	-2.9940
0.0000	0.0060	-0.0060
6.0000	5.9940	6.0060
12.0000	11.9940	12.0060
18.0000	17.9940	18.0060
24.0000	23.9940	24.0060
30.0000	29.9940	30.0060
24.0000	23.9940	24.0060
18.0000	17.9940	18.0060
12.0000	11.9940	12.0060
6.0000	5.9940	6.0060
0.0000	-0.0060	0.0060
-3.0000	-3.0060	-2.9940
-6.0000	-6.0060	-5.9940
-9.0000	-9.0060	-8.9940
-12.0000	-12.0060	-11.9940

Table 2. Pressure Verification Points (cont.)

Input Pressure (psi)	12 Month Lower Limit	12 Month Upper Limit
729 150G/729FC 150G		
-12.000	-12.030	-11.970
-9.000	-9.030	-8.970
-6.000	-6.030	-5.970
-3.000	-3.030	-2.970
0.000	-0.030	0.030
30.000	29.970	30.030
60.000	59.970	60.030
90.000	89.970	90.030
120.000	119.970	120.030
150.000	149.970	150.030
120.000	119.970	120.030
90.000	89.970	90.030
60.000	59.970	60.030
30.000	29.970	30.030
0.000	-0.030	0.030
-3.000	-3.030	-2.970
-6.000	-6.030	-5.970
-9.000	-9.030	-8.970
-12.000	-12.030	-11.970

Table 2. Pressure Verification Points (cont.)

Input Pressure (psi)	12 Month Upper Limit	12 Month Lower Limit
729 300G/729 FC 300G		
-12	-11.94	-12.06
-9	-8.94	-9.06
-6	-5.94	-6.06
-3	-2.94	-3.06
0	0.06	-0.06
60	60.06	59.94
120	120.06	119.94
180	180.06	179.94
240	240.06	239.94
300	300.06	299.94
240	240.06	239.94
180	180.06	179.94
120	120.06	119.94
60	60.06	59.94
0	0.06	-0.06
-3	-2.94	-3.06
-6	-5.94	-6.06
-9	-8.94	-9.06
-12	-11.94	-12.06

DC Voltage Measure Verification

To verify the dc voltage measure function, see Figure 1:

1. Push VDC, **Measure VDC** shows in the second row of the display.
2. Connect the Product red banana jack (V mA) to the 5522A HI VOLTS output.
3. Connect the Product black banana jack (COM) to the 5522A LO VOLTS output.
4. Set the 5522A for the voltage setting in Table 3 and verify the display reading on the Product.

Table 3. DC Voltage Measure Verification Points

Input Pressure (V)	12 Month Lower Limit	12 Month Upper Limit
0.000	-0.002	0.002
11.000	10.997	11.003
20.000	19.996	20.004
29.900	29.895	29.905

5. Set the 5522A to Standby.

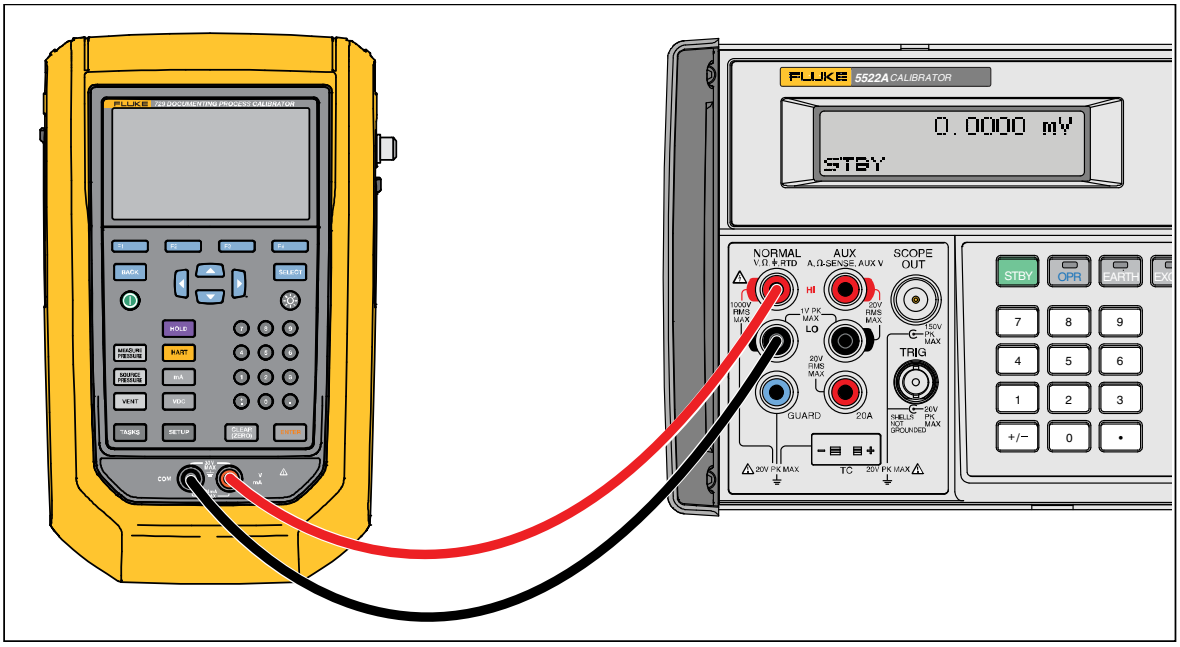

ien001.emf

Figure 1. DC Voltage Measure Verification Connections

DC Current Measure Verification

To verify the dc current measure function:

1. Push **mA**, **Measure Current** shows in the second row of the display.
2. Connect the Product as shown in Figure 2.
3. Set the 5522A to the first test point in Table 4 and edit its output so that the correct value shows on the 8508A.
4. Verify the display reading on the Product
5. Repeat for each applied value in Table 4.

Table 4. DC Current Measure Verification Points

Input Current (mA)	12 month Lower Limit	12 month Upper Limit
0.100	0.0980	0.1020
4.000	3.9976	4.0024
11.000	10.9969	11.0031
20.000	19.9960	20.0040
23.990	23.9856	23.9944

6. Set the 5522A to Standby.

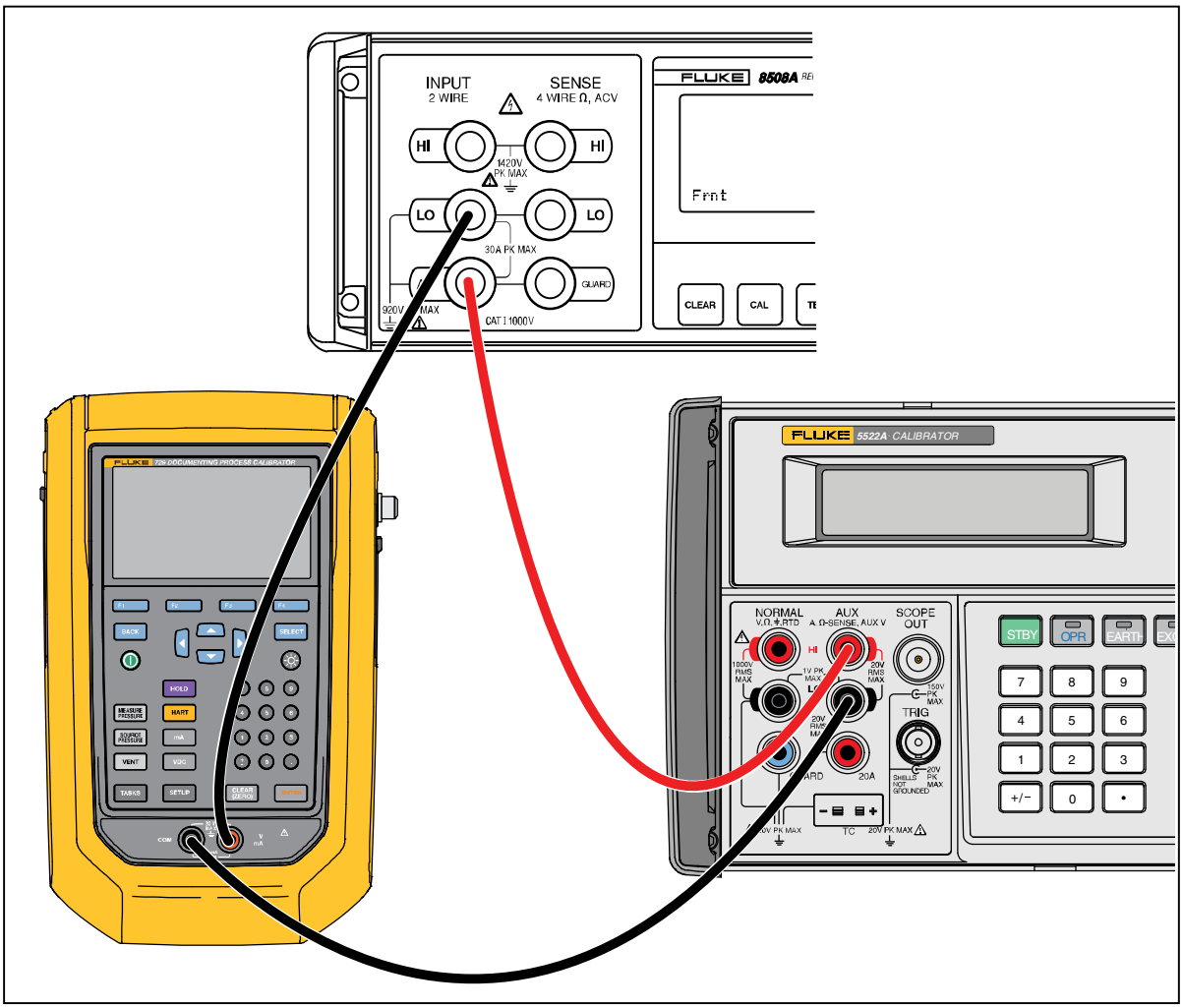

ien002.emf

Figure 2. DC Current Measure Verification Connections

DC Current Source Verification

To verify the dc current source function, see Figure 3:

1. Connect the Product red banana jack (V mA) to the 8508A HI mA INPUT.
2. Connect the Product black banana jack (COM) to the 8508A LO mA INPUT.
3. Set the 8508A for the Amp setting.
4. Use the arrow keys to move the cursor to second row of the display and highlight **Measure Current**.
5. Push **F3** to switch to the Source Current function.
6. Move the cursor to highlight the mA value.
7. Enter the current setting in Table 5, and push **ENTER**.
8. Verify the display reading on the Product.

Table 5. DC Current Source Verification Points

Input Current (mA)	12 Month Lower Limit	12 Month Upper Limit
0.100	0.098	0.102
4.000	3.998	4.002
11.000	10.997	11.003
20.000	19.996	20.004
23.990	23.986	23.994

9. Push **mA** to switch to mA Measure mode to exit the current source function.

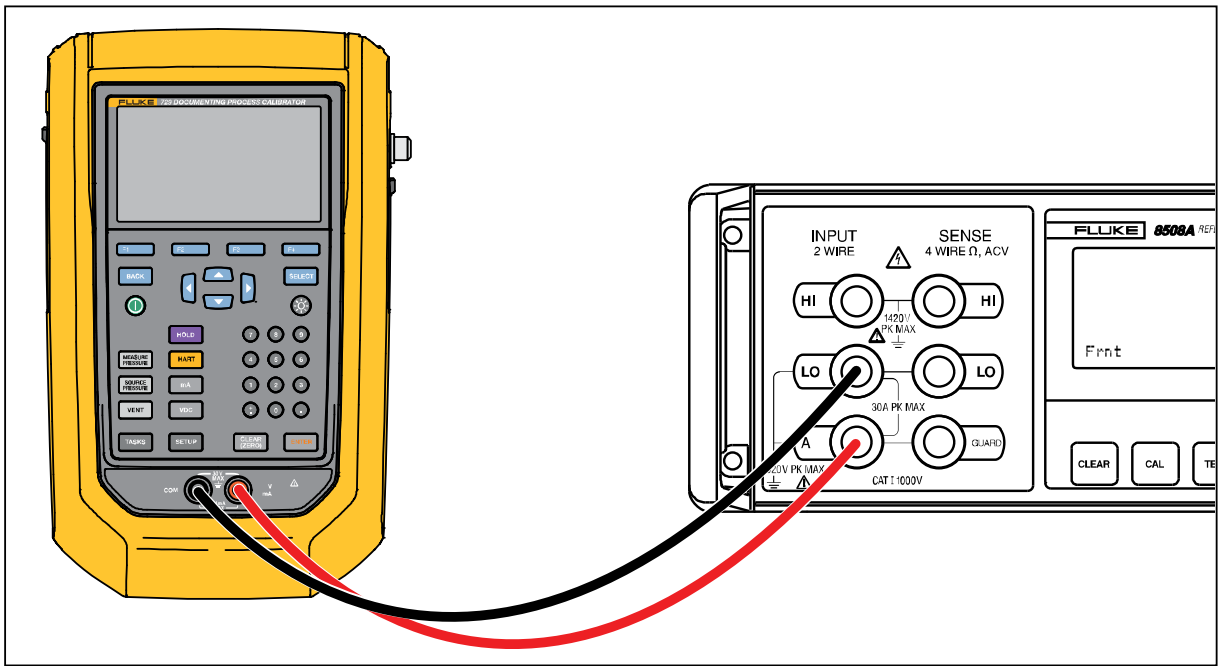

ien003.emf

Figure 3. DC Current Source Verification Connections

RTD Measure Verification

To verify the RTD measure function, see Figure 4.

When the Product detects temperature from the RTD connector, it turns on a temperature display.

1. Connect the 720URTDA to the Product.
2. Connect the 720URTDA Current HI to the 5522A HI RTD Output.
3. Connect the 720URTDA Sense HI to the 5522A HI RTD Output.
4. Connect the 720URTDA Current LO to the 5522A LO RTD Output.
5. Connect the 720URTDA Sense LO to 5522A LO RTD Output.
6. Set the 5522A to PT385, RTD, 4-wire Comp temperature settings in Table 6.
7. Verify that the display reading on the Product is within the limits.

Table 6. RTD Measure Verification Points

Applied Temperature from 5522A	Lower Limit	Upper Limit
-40.00 °C (84.271 Ω)	-40.10 °C	-39.90 °C
0.00 °C (100.000 Ω)	-0.10 °C	0.10 °C
150.00 °C (157.325 Ω)	149.90 °C	150.10 °C

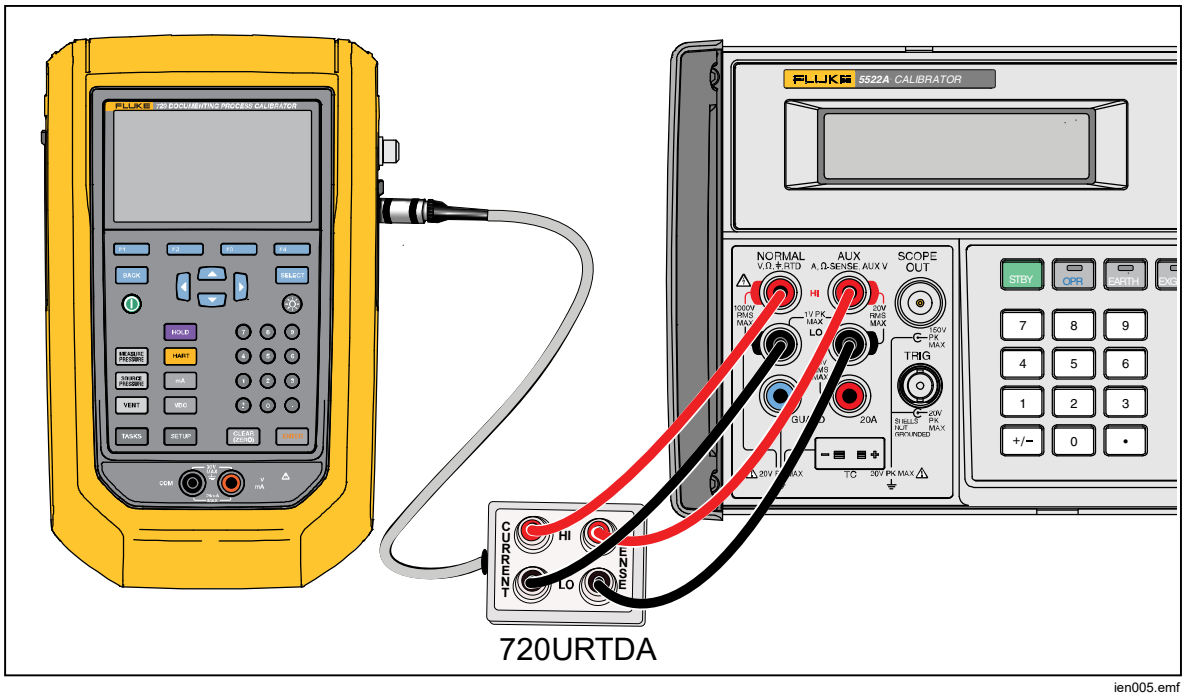

ien005.emf

Figure 4. RTD Measure Verification Connections

24V Loop Power Performance Check

To verify the 24V loop power function, see Figure 5:

1. Connect the Product red banana jack (V mA) to the 8508A HI VOLTS INPUT.
2. Connect the Product black banana jack (COM) to the 8508A LO VOLTS INPUT.
3. Push **mA** to get **Measure Current** in the lower display.
4. Move the cursor to second row of the display and highlight **Measure Current**.
5. Push **F1** to enable loop power.
6. The reading of 8508A should be between 26 V and 30 V. If it is not, repair may be necessary. See *Contact Fluke*.
7. Push **F1** to disable loop power.

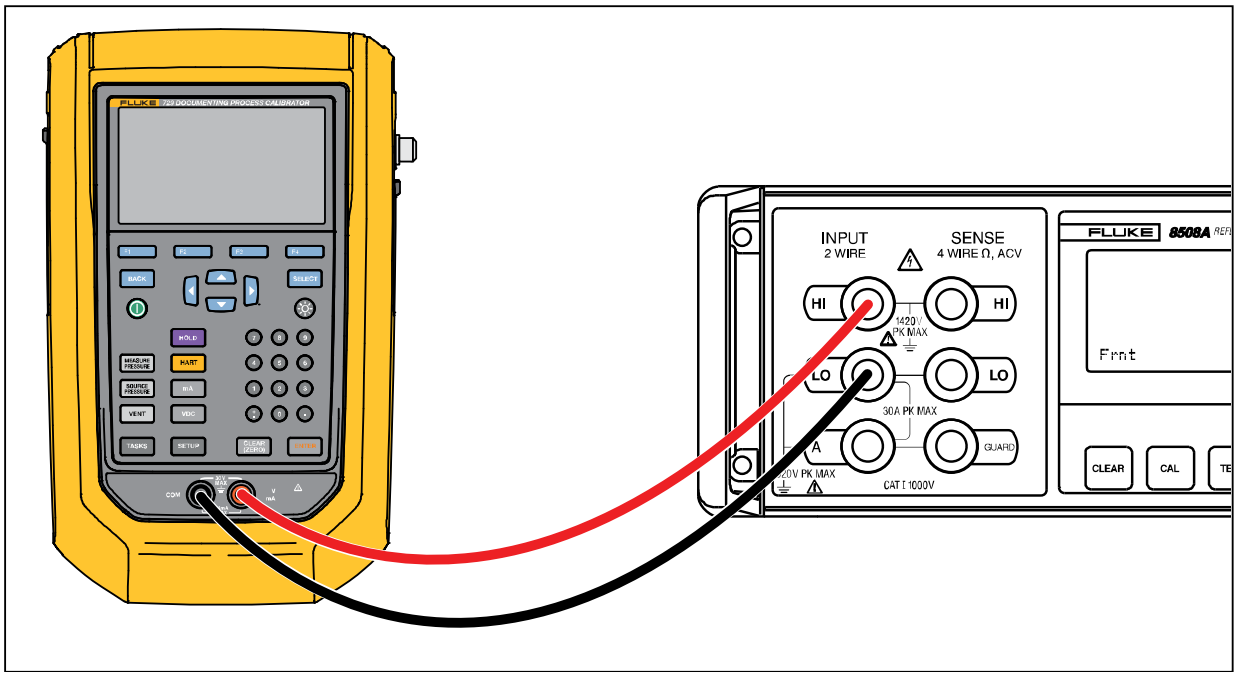

ien004.emf

Figure 5. 24V Loop Power Verification Connections

Calibration Adjustment

Calibrate the Product manually or with an electronic calibration process. These processes are explained below.

Calibration Data

The date of the last calibration and verification shows on the sticker on the calibration certificate and on the Instrument Information screen in the Setup menu. The CAL. STATUS number on the sticker should always match the Calibration Status number in the calibration screen. Only qualified personnel should calibrate the Product.

Service Center Calibration or Repair

Only qualified service personnel must do calibration, repairs, or service not included in this manual. If the Product fails, examine the battery pack first, and replace it if necessary.

Make sure to operate the Product in accordance with the instructions in this manual. If the Product is faulty, send a description of the failure with the Product. Pressure modules do not need to accompany the Product unless the module is faulty also. Be sure to pack the Product securely, in the original shipping container if it is available. See *Contact Fluke* and the Warranty Statement.

Manual Process (Front Panel)

Pressure Adjustment: 2-point adjustment (Zero and Full scale)

1. Push SETUP and select **729 information**.
2. Push F1 (**Calibrate Pressure**).
3. Enter the password **1234** and push ENTER.
4. Follow the display prompts to finish the adjustment.

Pressure adjustment: 11-point adjustment (Vacuum to Full scale)

1. Push SETUP select **Maintenance** to enter maintenance mode.
2. Select **Pressure Sensor Characterize**.
3. Enter the password **1234** and push ENTER.
4. Follow the display prompts to finish the adjustment.

Supply Sensor Self Calibration

1. Push SETUP select **Maintenance** to enter maintenance mode.
2. Select **Supply Sensor Self Calibration**.
3. Follow the display prompts to finish the adjustment.

Electrical Adjustment

1. Push SETUP and select **729 information**.
2. Push F2 (**Calibrate Electrical**).
3. Enter the password **1234** and push ENTER.
4. Follow the display prompts to finish the adjustment.

Electronic Calibration Process (Remote)

The USB port sends calibration process commands and receive readings. Do the calibration with a terminal program or you can write an automated-calibration program with programs like MetCal. This manual describes only the serial terminal mode.

Table 8 lists the required equipment.

Initiate Communication

Set up terminal communications with terminal communication software on a PC such as Hyperterminal or Ucon. Connect the Product's mini USB port to the PC. At first connection, a FTDI virtual serial port is installed on the PC.

The terminal settings are:

- Bits per second: 9600
- Data bits: 8
- Parity: None
- Stop bits: 1
- Flow control: none
- Local echo: on

Adjust Pressure

Use the equipment and procedures in this section to adjust pressure. The test equipment required for this adjustment is in Table 7.

Table 7. Test Equipment to Calibrate Pressure

Equipment	Minimum Specifications	Recommended Model
Pressure Controller/Calibrator	-14 psi to 300 psi Accuracy: 0.005 %	Ruska 7252xi

Note

The Product uses a 1/8" NPT female connection in the pressure input port. Various adapters may be needed to connect to the pressure standard. Make sure the hose, tubing, and fittings have a rated working pressure at or above the pressure of the Product. It is also important that there be no leaks. To achieve accurate calibration, use PTFE tape where appropriate.

To adjust the pressure function, follow the procedures in Tables 8, 9, and 10.

Table 8. Ambient Pressure Sensor Characterize Steps for 30 psi Model

Expected Manual Process (Front Panel)	Expected Electronic Calibration Process (Remote)
Connect the Product pressure input to the 7252xi output	Message prompts the operator Connect pressure input with the 7252xi test output
Output -12 psi from 7252xi, input actual value and push F3 (**Go On**) to proceed	Output -12 psi from 7252xi Wait for 7252xi output ready Send command **CAL_NEXT <actual_pressure>** to proceed
Output -9 psi from 7252xi, input actual value and push F3 (**Go On**) to proceed	Output -9 psi from 7252xi Wait for 7252xi output ready Send command **CAL_NEXT <actual_ pressure >** to proceed
Output -6 psi from 7252xi, input actual value and push F3 (**Go On**) to proceed	Output -6 psi from 7252xi Wait for 7252xi output ready Send command **CAL_NEXT <actual_ pressure >** to proceed
Output -3 psi from 7252xi, input actual value and push F3 (**Go On**) to proceed	Output -3 psi from 7252xi Wait for 7252xi output ready Send command **CAL_NEXT <actual_ pressure >** to proceed

Table 8. Ambient Pressure Sensor Characterize Steps for 30 psi Model (cont.)

Expected Manual Process (Front Panel)	Expected Electronic Calibration Process (Remote)
Output 0 psi from 7252xi, input actual value and push **F3** (**Go On**) to proceed	Output 0 psi from 7252xi Wait for 7252xi output ready Send command **CAL_NEXT <actual_pressure>** to proceed
Output 5 psi from 7252xi, input actual value and push **F3** (**Go On**) to proceed	Output 5 psi from 7252xi Wait for 7252xi output ready Send command **CAL_NEXT <actual_pressure>** to proceed
Output 10 psi from 7252xi, input actual value and push **F3** (**Go On**) to proceed	Output 10 psi from 7252xi Wait for 7252xi output ready Send command **CAL_NEXT <actual_pressure>** to proceed
Output 15 psi from 7252xi, input actual value and push **F3** (**Go On**) to proceed	Output 15 psi from 7252xi Wait for 7252xi output ready Send command **CAL_NEXT <actual_pressure>** to proceed
Output 20 psi from 7252xi, input actual value and push **F3** (**Go On**) to proceed	Output 20 psi from 7252xi Wait for 7252xi output ready Send command **CAL_NEXT <actual_pressure>** to proceed
Output 25 psi from 7252xi, input actual value and push **F3** (**Go On**) to proceed	Output 25 psi from 7252xi Wait for 7252xi output ready Send command **CAL_NEXT <actual_pressure>** to proceed
Output 30 psi from 7252xi, input actual value and push **F3** (**Go On**) to proceed	Output 30 psi from 7252xi Wait for 7252xi output ready Send command **CAL_NEXT <actual_pressure>** to proceed
Calibration is completed, push **F3** (**Go On**) to exit the calibration	Continue Send command **CAL_NEXT** until *NOT* is returned from the Product by **CAL_STEPTYPE?** query

Table 9. Ambient Pressure Sensor Characterize Steps for 150 psi Model

Expected Manual Process (Front Panel)	Expected Electronic Calibration Process (Remote)
Connect the Product pressure input to 7252xi output	Message prompts the operator Connect pressure input with 7252xi's test output
Output -12 psi from 7252xi, input actual value and push F3 (**Go On**) to proceed	Output -12 psi from 7252xi Wait for 7252xi output ready Send command **CAL_NEXT <actual_pressure>** to proceed
Output -9 psi from 7252xi, input actual value and push F3 (**Go On**) to proceed	Output -9 psi from 7252xi Wait for 7252xi output ready Send command **CAL_NEXT <actual_pressure>** to proceed
Output -6 psi from 7252xi, input actual value and push F3 (**Go On**) to proceed	Output -6 psi from 7252xi Wait for 7252xi output ready Send command **CAL_NEXT <actual_pressure>** to proceed
Output -3 psi from 7252xi, input actual value and push F3 (**Go On**) to proceed	Output -3 psi from 7252xi Wait for 7252xi output ready Send command **CAL_NEXT <actual_pressure>** to proceed
Output 0 psi from 7252xi, input actual value and push F3 (**Go On**) to proceed	Output 0 psi from 7252xi Wait for 7252xi output ready Send command **CAL_NEXT <actual_pressure>** to proceed
Output 25 psi from 7252xi, input actual value and push F3 (**Go On**) to proceed	Output 25 psi from 7252xi Wait for 7252xi output ready Send command **CAL_NEXT <actual_pressure>** to proceed
Output 50 psi from 7252xi, input actual value and push F3 (**Go On**) to proceed	Output 50 psi from 7252xi Wait for 7252xi output ready Send command **CAL_NEXT <actual_pressure>** to proceed

Table 9. Ambient Pressure Sensor Characterize Steps for 150 psi Model (cont.)

Expected Manual Process (Front Panel)	Expected Electronic Calibration Process (Remote)
Output 75 psi from 7252xi, input actual value and push F3 (**Go On**) to proceed	Output 75 psi from 7252xi Wait for 7252xi output ready Send command **CAL_NEXT <actual_pressure>** to proceed
Output 100 psi from 7252xi, input actual value and push F3 (**Go On**) to proceed	Output 100 psi from 7252xi Wait for 7252xi output ready Send command **CAL_NEXT <actual_pressure>** to proceed
Output 125 psi from 7252xi, input actual value and push F3 (**Go On**) to proceed	Output 125 psi from 7252xi Wait for 7252xi output ready Send command **CAL_NEXT <actual_pressure>** to proceed
Output 150 psi from 7252xi, input actual value and push F3 (**Go On**) to proceed	Output 150 psi from 7252xi Wait for 7252xi output ready Send command **CAL_NEXT <actual_pressure>** to proceed
Calibration is completed, push F3 (**Go On**) to exit the calibration	Continue Send command **CAL_NEXT** until *NOT* is returned from the Product by **CAL_STEPTYPE?** query

Table 10. Ambient Pressure Sensor Characterize Steps for 300 psi Model

Expected Manual Process (Front Panel)	Expected Electronic Calibration Process (Remote)
Connect the Product pressure input to 7252xi's output	Message prompts the operator Connect pressure input with 7252xi's test output
Output -12 psi from 7252xi, input actual value and push **F3** (**Go On**) to proceed	Output -12 psi from 7252xi Wait for 7252xi output ready Send command **CAL_NEXT <actual_pressure>** to proceed
Output -9 psi from 7252xi, input actual value and push **F3** (**Go On**) to proceed	Output -9 psi from 7252xi Wait for 7252xi output ready Send command **CAL_NEXT <actual_pressure>** to proceed
Output -6 psi from 7252xi, input actual value and push **F3** (**Go On**) to proceed	Output -6 psi from 7252xi Wait for 7252xi output ready Send command **CAL_NEXT <actual_pressure>** to proceed
Output -3 psi from 7252xi, input actual value and push **F3** (**Go On**) to proceed	Output -3 psi from 7252xi Wait for 7252xi output ready Send command **CAL_NEXT <actual_pressure>>** to proceed
Output 0 psi from 7252xi, input actual value and push **F3** (**Go On**) to proceed	Output 0 psi from 7252xi Wait for 7252xi output ready Send command **CAL_NEXT <actual_pressure>** to proceed
Output 50 psi from 7252xi, input actual value and push **F3** (**Go On**) to proceed	Output 50 psi from 7252xi Wait for 7252xi output ready Send command **CAL_NEXT <actual_pressure>** to proceed
Output 100 psi from 7252xi, input actual value and push **F3** (**Go On**) to proceed	Output 100 psi from 7252xi Wait for 7252xi output ready Send command **CAL_NEXT <actual_pressure>** to proceed

Table 10. Ambient Pressure Sensor Characterize Steps for 300 psi Model (cont.)

Expected Manual Process (Front Panel)	Expected Electronic Calibration Process (Remote)
Output 150 psi from 7252xi, input actual value and push F3 (**Go On**) to proceed	Output 150 psi from 7252xi Wait for 7252xi output ready Send command **CAL_NEXT <actual_pressure>** to proceed
Output 200 psi from 7252xi, input actual value and push F3 (**Go On**) to proceed	Output 200 psi from 7252xi Wait for 7252xi output ready Send command **CAL_NEXT <actual_pressure>** to proceed
Output 250 psi from 7252xi, input actual value and push F3 (**Go On**) to proceed	Output 250 psi from 7252xi Wait for 7252xi output ready Send command **CAL_NEXT <actual_pressure>** to proceed
Output 300 psi from 7252xi, input actual value and push F3 (**Go On**) to proceed	Output 300 psi from 7252xi Wait for 7252xi output ready Send command **CAL_NEXT <actual_pressure>** to proceed
Calibration is completed, push F3 (**Go On**) to exit the calibration	Continue send Send command **CAL_NEXT** until *NOT* is returned from the Product by **CAL_STEPTYPE?** query

Adjust Voltage Input

The test equipment to adjust the voltage input is listed in Table 11.

Table 11. Required Test Equipment for Voltage Input Adjustment

Equipment	Minimum Specifications	Recommended Model
DC Calibrator	DC Voltage: 0 V to 30 V Accuracy: ±0.002 % +0.5 mV DC Current 0 mA to 24 mA Accuracy: ±0.002 % +0.5 µA	Fluke 5522A Multi-Product Calibrator

Use the test procedure in Table 12 to adjust the voltage input.

Table 12. Voltage Input Adjustment Procedure

Expected Manual Process (Front Panel)	Expected Electronic Calibration Process (Remote)
Connect the Product VDC input with Fluke 5522A NORMAL output	Message prompts the operator Connect VDC input to 5522A NORMAL output
Output 0 V from Fluke 5522A, input actual value and push **Go On** to proceed	Output 0 V dc from 5522A Wait for at least 3 seconds for signal stable Send command **CAL_NEXT <actual_volts>** to proceed
Output 30 V from Fluke 5522A, input actual value and push **Go On** to proceed	Output 30 V dc from 5522A Wait for at least 3 seconds for signal stable Send command **CAL_NEXT <actual_volts>** to proceed

Adjust mA Input

The test equipment to adjust the mA input is listed in Table 13.

Table 13. Required Test Equipment for mA Input Adjustment

Equipment	Minimum Specifications	Recommended Model
DC Calibrator	DC Voltage: 0 V to 30 V Accuracy: ±0.002 % +0.5 mV DC Current 0 mA to 24 mA Accuracy: ±0.002 % +0.5 µA	Fluke 5522A Multi-Product Calibrator
Digital Multimeter	DC Current: 0 mA to 26 mA Accuracy: ±0.002 % +0.5 µA	Fluke 8508A

Note

All reference (actual) values that you input during the calibration procedure should be the reading from 8508A.

Use the test procedure in Table 14 to adjust the mA input.

Table 14. mA Input Adjustment Procedure

Expected Manual Process (Front Panel)	Expected Electronic Calibration Process (Remote)
Connect the Product mA input with Fluke 5522A AUX output	Message prompts the operator Connect mA input with 5522A AUX output
Output 0 mA from Fluke 5522A, input actual value and push F3 (**Go On**) to proceed	Output 0mA dc from 5522A Wait for at least 3 seconds for signal stable Send command **CAL_NEXT <actual_mA>** to proceed
Output 22 mA from Fluke 5522A, input actual value and push F3 (**Go On**) to proceed	Output 22 mA dc from 5522A Wait for at least 3 seconds for signal stable Send command **CAL_NEXT <actual_mA>** to proceed

Adjust mA Source

Table 15 is a list of the test equipment to adjust the mA source.

Table 15. Required Test Equipment for mA Source Adjustment

Equipment	Minimum Specifications	Recommended Model
Digital Multimeter	DC Current: 0 mA to 26 mA Accuracy: ±0.002 % +0.5 µA	Fluke 8508A

Use the test procedure in Table 16 to adjust the mA source.

Table 16. mA Source Adjustment Procedure

Expected Manual Process (Front Panel)	Expected Electronic Calibration Process (Remote)
Connect the Product mA output to Fluke 8508A's Amps input, and set Fluke 8508A to DCA function	Message prompts the operator Connect the Product mA output to 8508A's Amps input
Input measured mA value from Fluke 8508A, and push F3 (**Go On**) to proceed	Wait for at least 3 seconds for signal stable Send command **CAL_NEXT <actual_mA>** to proceed
Input measured mA value from Fluke 8508A, and push F3 (**Go On**) to proceed	Wait for at least 3 seconds for signal stable Send command **CAL_NEXT <actual_mA>** to proceed
Input measured mA value from Fluke 8508A, and push F3 (**Go On**) to proceed	Wait for at least 3 seconds for signal stable Send command **CAL_NEXT <actual_mA>** to proceed

Adjust RTD

Table 17 is a list of the test equipment to adjust the RTD.

Table 17. Required Test Equipment for RTD Adjustment

Equipment	Minimum Specifications	Recommended Model
DC Calibrator	DC Voltage: 0 V to 30 V Accuracy: ±0.002 % +0.5 mV DC Current 0 mA to 24 mA Accuracy: ±0.002 % +0.5 µA	Fluke 5522A Multi-Product Calibrator
RTD adapter		Fluke 720URTDA

Use the test procedure in Table 18 for RTD adjustment.

Table 18. RTD Adjustment Procedure

Expected Manual Process (Front Panel)	Expected Electronic Calibration Process (Remote)
Connect FLUKE 720URTDA to the Product RTD input, and connect it to Fluke 5522A (in 4-wire ohms mode)	Message prompts the operator Connect 720URTDA to the Product RTD Lemo jack, and connect the adapter with 5522A in 4-wire connection
Output 80 Ω from Fluke 5522A, input actual value and push F3 (**Go On**) to proceed	Output 80 Ω from 5522A in 4-wire mode Wait for at least 3 seconds for a stable signal Send command **CAL_NEXT <actual_ohms>** to proceed
Output 160 Ω from Fluke 5522A, input actual value and push F3 (**Go On**) to proceed	Output 160 Ω from 5522A in 4-wire mode Wait for at least 3 seconds for a stable signal Send command **CAL_NEXT <actual_ohms>** to proceed
Calibration is completed, push F3 (**Go On**) to exit the calibration	Continue Send command **CAL_NEXT** until *NOT* is returned from the Product by **CAL_STEPTYPE?** query

Adjust Continuity

Table 29 lists the test equipment to test continuity.

Table 19. Required Test Equipment for Continuity Adjustment

Equipment	Minimum Specifications	Recommended Model
Resistor	0 Ω Accuracy: ±1 % 1 kΩ Accuracy: ±1 %	
Digital Multimeter	DC Current: 0 mA to 26 mA Accuracy: ±0.002 % +0.5 µA	Fluke 8508A

Note

All reference (actual) values the you input during the calibration procedure should be the reading from 8508A.

Use the test procedure in Table 20 for continuity adjustment.

Table 20. Continuity Adjustment Procedure

Expected Manual Process (Front Panel)	Expected Electronic Calibration Process (Remote)
Connect 0 Ω resistor to the Product switch input	Message prompts the operator Connect a 0 Ω resistor to the Product switch input
Input actual resistance value and push **F3** (**Go On**) to proceed	Wait for at least 3 seconds for signal stable Send command **CAL_NEXT <actual_ohms>** to proceed
Connect 1 kΩ resistor to the Product switch input	Message prompts the operator Connect a 1 kΩ resistor to the Product switch input
Input actual resistance value and push **F3** (**Go On**) to proceed	Wait for at least 3 seconds for signal stable Send command **CAL_NEXT <actual_ohms>** to proceed

Calibration Remote Commands

1. Get last calibrated date
   - Syntax

   CAL_DATE? [{EMM|PCM}]
2. Return PCM cal date if no argument provided.
3. CAL_START - Start a calibration
   - Syntax

   CAL_START {EMM|PCM|PCHAR},<password>

   EMM

   Run calibration procedure for electrical functions

   PCM

   Run 2-point pressure calibration for internal pressure module

   PCHAR

   Run ambient pressure sensor characterization

   <password>

   Default value 1234, or super password calculated by Product serial number

   4. Get type of current calibration step
   - Syntax

   CAL_STEPTYPE?
   - Response

   NOT

   No calibration procedure is running

   INS

   Displays message for next step

   REF

   Expects reference value for current step

   RUN

   Busy

   5. Get name of current calibration step
   - Syntax

   CAL_STEPNAME?

   6. Get nominal calibration reference
   - Syntax

   CAL_REF?
   - Response

   <ref_value>,<unit>

7. Proceed to next step with optional reference

- Syntax

CAL_NEXT [<ref>[,<unit>]]

For *REF* step, a reference value must be sent with this command to proceed.

8. Skip to next step

- Syntax

CAL_SKIP

9. Backup a step

- Syntax

CAL_BACKUP

10. Skip to next section

- Syntax

CAL_SECTION

Use this command to skip some function do not need to be recalibrated.

11. Save CAL constants

- Syntax

CAL_SAVE

12. Abort calibration

- Syntax

CAL_ABORT

Example:

```
=>CAL_START EMM 1234          # Start electrical function calibration

=>CAL_STEPTYPE?               # Get current step type
INS                           # Instruction

=>CAL_STEPNAME?               # Get current step name
DC20MA_INS                    # Need to connect 729 to 5522A AUX

=>CAL_NEXT                    # Proceed to next step

=>CAL_STEPTYPE?               # Get current step type
REF                           # Reference value is expected to proceed

=>CAL_STEPNAME?               # Get current step name
DC20MA_1                      # The 1st calibration point of MADC measure function

=>CAL_REF?                    # Get nominal reference value
0.000000e+00,mA               # 0.000 mA

=>CAL_NEXT                    # Proceed with default reference value

=>CAL_STEPTYPE?               # Get current step type
REF                           # Reference value is expected to proceed

=>CAL_STEPNAME?               # Get current step name
DC20MA_2                      # The 2nd calibration point of MADC measure function

=>CAL_REF?                    # Get nominal reference value
2.200000e+01,mA               # 22.000 mA

=>CAL_ABORT                   # Abort calibration

=>CAL_STEPTYPE?               # Get current step name
NOT                           # No calibration is running
```

Serial Commands

- The Serial Commands provide basic measure/source functions
- The serial port should be configured for 9600, 8 data bits, 1 stop bit, no parity
- The Product will echo letters back by default, user can enable/disable it with ECHO command
- The Product will show prompt which indicates the command execution result of last command, user also can disable it with PROMPT command

  =>
  Last command is executed successfully
  !>
  Last command execution contains error, please check the error with command *ERROR*

- All commands and arguments are case insensitive
- < > indicates a required parameter.
- [ ] indicates optional parameters.
- '|' indicates alternate parameter values.

General

1. Get identity
   - Syntax

   ***IDN?**
   - Response

   FLUKE,<ModelName>,<SerialNum>,<Main Rev>+<PCM Rev>+<EMM Rev>

2. Reset the instrument
   - Syntax

   ***RST**

3. All settings except instrument settings are reset to the default value.

4. Error queue are cleared as well, and front panel is also reset.

5. Clear error queue
   - Syntax

   ***CLS**

6. The error queue is cleared.

7. Get error
   - Syntax

   ERROR?
   FAULT? (to be compatible with existing Martel product)
   - Response

   <error_no>,<error_message>

8. The earliest error is dequeued and its error number and message are returned.

9. Get echo setting
   - Syntax

   ECHO?
   - Response

   0 or *1*

10. Enable/disable echo
    - Syntax

    ECHO {0|1|ON|OFF}

11. Get prompt setting
    - Syntax

    PROMPT?
    - Response

    0 or *1*

12. Enable/Disable prompt
    - Syntax

    PROMPT {0|1|ON|OFF}

13. Get date format setting
    - Syntax

    DATE_FORMAT?
    - Response

    YMD, *MDY* or *DMY*

14. Set date format
    - Syntax

    DATE_FORMAT {YMD|MDY|DMY}

15. Get time format setting
    - Syntax

    TIME_FORMAT?
    - Response

    12H or *24H*

16. Set time format
    - Syntax

    TIME_FORMAT? {12H|24H}

17. Get clock value
    - Syntax

    CLOCK?
    - Response

    <clock value depends on date format>

18. Set clock value
    - Syntax

    CLOCK <year>,<month>,<day>,<hour>,<minute>[,<second>]

19. Get temperature unit setting
    - Syntax

    TEMP_UNIT?
    - Response

    Cel or *Far*

20. Set temperature unit
    - Syntax

    TEMP_UNIT {CEL|FAR}

21. Get pressure unit setting
    - Syntax

    PRES_UNIT?

22. Set pressure unit
    - Syntax

    PRES_UNIT <unit>
    - Argument

      <unit>

    INHG, MMHG, MHG, PA, KPA, MPA, BAR, MBAR, PSI, ATM, KG/SQCM, G/SQCM
    CMH2O4C, MMH2O4C, INH2O4C, FTH2O4C, MH2O4C
    CMH2O20C, MMH2O20C, INH2O20C, FTH2O20C, MH2O20C
    CMH2O60F, MMH2O60F, INH2O60F, FTH2O60F, MH2O60F

23. Pressure unit of both internal pressure module and 750P pressure module are changed, use **PMOD_UNIT** to change 750P's unit separately.

24. Get auto-off setting
    - Syntax

    AUTO_OFF?
    - Response

    OFF, *5*, *10*, *15*, *30*, *60* minutes

25. Set auto-off
    - Syntax

    AUTO_OFF {OFF|5|10|15|30|60}

Example:

```
=>*IDN?
FLUKE,729FC,12345678,0.0.46+0.1.22+0.1.9

=>ERROR?
0,No Error

=>DATE_FORMAT?
YMD

=>PRES_UNIT?
kPa

=>CLOCK?
06/02/2017 17:33:30

=>CLOCK 2017,6,2,18,0,0
```

Internal Pressure

1. Get internal pressure module function
    - Syntax

    UPPER_FUNC?

    or **FUNC1?**

    or **FUNC?**
    - Response

    VENT, *MEASURE* or *SOURCE*

2. Put internal pressure module to measure mode
    - Syntax

    MEASURE

    or **MEAS**

3. Put internal pressure module to vent mode
    - Syntax

    VENT

4. Get zero offset
    - Syntax

    ZERO_MEAS?

    or **ZERO?**
    - Response

    <zero_offset>,<unit>

5. Zero internal pressure module
    - Syntax

    ZERO_MEAS

    or **ZERO**

6. Clear zero offset
   - Syntax

   ZERO_CLEAR

7. Get temperature of pressure sensor (testport)
   - Syntax

   TEMP?
   - Response

   <temperature>,<unit>

8. Get pressure value when switch is detected open
   - Syntax

   OPEN_PRES?
   - Response

   <open_pressure>,<unit>

9. Get pressure value when switch is detected closed
   - Syntax

   CLOSE_PRES?
   - Response

   <close_pressure>,<unit>

10. Get internal pressure module setpoint
    - Syntax

    UPPER_OUT?
    or **OUT1?**
    or **OUT?**
    - Response

    <setpoint>,<unit>,<slewrate>

11. Set pressure setpoint
    - Syntax

    UPPER_OUT <setpoint>[,<unit>[,<slew_rate_per_second>]]
    or **OUT1** <setpoint>[,<unit>[,<slew_rate_per_second>]]
    or **OUT** <setpoint>[,<unit>[,<slew_rate_per_second>]]
    - Argument

      <setpoint>

    New setpoint in desired pressure unit.

      <unit>

    Pressure unit, optional, keep original pressure unit if omitted.

      <slew_rate_per_second>

    Slew rate per second, optional, no rate control if omitted.

12. Internal pressure module is put into source function automatically

13. Get internal pressure module reading
    - Syntax

    UPPER_VAL?
    or **VAL1?**
    or **VAL?**
    - Response

        <pressure_reading>,<unit>

Example:

```
=>UPPER_FUNC?
MEASURE

=>OUT 0.2MPa                    # Set to 200kPa output

=>OUT?                          # Get setpoint and slewrate
0.20000,MPa,0.00000

=>UPPER_OUT 25,CMH2O4C,1        # Set to 25cmH2O output

=>UPPER_OUT?
25.00,cmH2O4C,1.00

=>UPPER_VAL?                    # Get pressure reading
25.01,cmH2O4C

=>MEASURE                       # Set to measure mode

=>UPPER_FUNC?                   # Get internal pressure module function
MEASURE

=>VENT                          # Set to vent mode

=>ZERO_MEAS                     # Zero internal pressure module
```

Electrical Functions

1. Get electrical function
    - Syntax

    LOWER_FUNC?
    or **FUNC2?**
    - Response

    MADC, *MADCSRC*, *MADCSIM*, *VDC*, *CONT*

2. Set electrical function
    - Syntax

    LOWER_FUNC {MADC|MADCSRC|MADCSIM|VDC|CONT}
    or **FUNC2** {MADC|MADCSRC|MADCSIM|VDC|CONT}

3. Get setpoint of electrical source function
    - Syntax

    LOWER_OUT?
    or **OUT2?**
    - Response

        <setpoint>,mA,<slew_rate>

4. Set setpoint of electrical source function
   - Syntax

   OUT2 <setpoint>[,<unit>[,<slew_rate_per_second>]]
   or **LOWER_OUT** <setpoint>[,<unit>[,<slew_rate_per_second>]]
   - Argument

   <setpoint>
   New setpoint in desired unit.
   <unit>
   mA or A, optional, mA if omitted.
   <slew_rate_per_second>
   New slew rate per second, optional, no rate control if omitted.
   - Need to set electrical function to either *MADCSRC* or *MADCSIM* first, if not, *MADCSRC* will be set by default.

5. Get electrical reading
   - Syntax

   LOWER_VAL?
   or **VAL2?**
   - Response

   <reading>,<unit>

6. Get loop power setting
   - Syntax

   LOOP_PWR?
   or **LOOP_POWER?**
   - Response

   0 or *1*

7. Set loop power of MADC function
   - Syntax

   LOOP_PWR {0|1|ON|OFF}
   or **LOOP_POWER** {0|1|ON|OFF}

8. Valid for MADC function only.

9. Get HART resistor setting
   - Syntax

   HART?
   - Response

   ON or *OFF*

10. Enable HART resistor
    - Syntax

    HART_ON

11. Disable HART resistor
    - Syntax

    HART_OFF

12. Get auxiliary function
    - Syntax

    AUX_FUNC?
    FUNC3?
    - Response

    PRESSURE, *RTD*, *HARTPV*

13. Set auxiliary function
    - Syntax

    AUX_FUNC {PRESSURE|RTD|HARTPV}
    or **FUNC3** {PRESSURE|RTD|HARTPV}

14. If configure *PRESSURE*, 750P needs to be connected to the instrument first

15. If configure *RTD*, 720RTD needs to be connected to the instrument first

16. If configure *HARTPV*, a HART transmitter needs to be connected by polling of HART

17. Get auxiliary reading
    - Syntax

    AUX_VAL?
    or **VAL3?**
    - Response

    <reading>,<unit>

Example:

```
=>LOWER_FUNC?                    # Get electrical function
MADC

=>LOOP_POWER 1                   # Enable loop power

=>LOOP_POWER?
1

=>LOWER_OUT 0.001A               # Set output 1mA source mode

=>LOWER_OUT?                     # Get setpoint and slewrate
1.000000e+00,mA,0.000000e+00

=>AUX_FUNC?                      # Get auxiliary function
PRESSURE

=>AUX_FUNC RTD                   # Set auxiliary function to temperature

=>AUX_VAL?                       # Get auxiliary function reading
81.64,Far,110.733,Ohms
```

750P Pressure Module

1. Get 750P status
   - Syntax

   PMOD?
   - Response

   <avail_status>,<model>,<serial>,<last_cal>

   <avail_status>

   0 not available
   1 available

2. Get 750P range
   - Syntax

   PMOD_RANGE?
   - Response

   <zero>,<fullscale>,<unit>

3. Get pressure module unit
   - Syntax

   PMOD_UNIT?
   - Response

   <name_of_pressure_unit_configured>

4. Set pressure module unit
   - Syntax

   PMOD_UNIT <unit>
   - Argument

     <unit>

   INHG, MMHG, MHG, PA, KPA, MPA, BAR, MBAR, PSI, ATM, KG/SQCM, G/SQCM
   CMH2O4C, MMH2O4C, INH2O4C, FTH2O4C, MH2O4C
   CMH2O20C, MMH2O20C, INH2O20C, FTH2O20C, MH2O20C
   CMH2O60F, MMH2O60F, INH2O60F,

5. Reset pressure module
   - Syntax

   PMOD_RESET

6. Pressure module's unit and zero offset are reset as if the module is just connected.

7. Get zero offset of pressure module
   - Syntax

   PMOD_ZERO?

   ZERO_EXT?
   - Response

   <zero_offset>,<unit>

8. Zero pressure module
   - Syntax

   PMOD_ZERO [<abs_offset>[,<unit>]]
   ZERO_EXT [<abs_offset>[,<unit>]]
   - Argument

   <abs_offset>
   Actual pressure for absolute pressure module
   <unit>
   Unit of actual pressure value

Example:

```
=>PMOD?                          # Get status of 750P module
1,FLUKE-750PA27,2731072,02/04/2014

=>PMOD_RANGE?                    # Get 750P module range
0.0,2068.4,kPa

=>PMOD_ZERO?                     # Get 750P zero offset
0.0,kPa

=>PMOD_ZERO 101.3,kPa            # Zero absolute 750P module with actual pressure
```

HART Function

1. Get HART Status
   - Syntax

   HART_STATUS?
   - Response

   IDLE
   No transmitter connected
   POLLING
   Bus polling in progress
   CONNECTING
   A transmitter is found, reading data from transmitter
   CONNECTED
   Transmitter is connected

2. Disconnect from a Transmitter
   - Syntax

   HART_DISCONNECT

3. Connect to a Transmitter
   - Syntax

   HART_CONNECT <address>
   - Argument

   <address>
   HART bus address, 0 to 15

4. HART status will be updated automatically when a transmitter is connected

5. Get Interval of Auto Update of All Dynamic Variables
   - Syntax

   HART_AUTO_UPDATE?

6. Set Interval of Auto Update of All Dynamic Variables
   - Syntax

   HART_AUTO_UPDATE <interval>
   - Argument

     <interval>

   50 to 50000 milliseconds, 0 to disable auto update.

7. Write to some HART variable, like PV_UNIT, need to disable auto update first, to avoid conflict.

8. Read HART Variable
   - Syntax

   HART_READ? <var_name>
   - Argument

     <var_name>

   CMD_RESPONSE - Command response code
   DEV_STATUS - Field device status
   DEV_TYPE - Expanded device type
   MIN_PREAMBLES - Minimal preambles for master
   HART_MAJORREV - HART major revision
   DEV_REV - Device revision
   SW_REVISION - Software revision
   DEV_ID - Device ID
   POLL_ADDRESS - Polling address
   PV - Primary variable value
   PV_UNIT - Primary variable unit code
   PV_LOOP_CURRENT - PV loop current
   PV_PERCENT - PV percent
   SV - Secondary variable value
   SV_UNIT - Secondary variable unit code
   TV - Tertiary variable value
   TV_UNIT - Tertiary variable unit code
   QV - Quaternary variable value
   QV_UNIT - Quaternary variable unit code
   PV_CLASS - PV classification code
   SV_CLASS - SV classification code
   TV_CLASS - TV Classification code
   QV_CLASS - QV classification code
   PV_RANGE_UNIT - PV range unit
   LRV - PV lower range value
   URV - PV upper range value
   SENSOR_SN - Transducer serial number
   SENSOR_UNIT - Transducer range unit code
   LTL - Transducer lower test limit
   UTL - Transducer upper test limit

MINSPAN - Transducer minimal span
ALARM - PV alarm selection
DAMPING - PV damping
XFER_FUNC - PV transfer function
TAG - Tag (8 letters)
MESSAGE - Message (32 letters)
DESCRIPTOR - Descriptor (16 letters)
DATE - Date
PV_FIXED_CURRENT - PV fixed loop current
MEASURED_PV_CURRENT - Measured PV loop current

- Response

<value>,<unit> for IEEE754 variables

<string> for PACKET, LATIN variables

<date_string> for DATE variable

<value>,<string> for ENUM and BITENUM variables

9. Write HART Variable
   - Syntax

   HART_WRITE <var_name>,<value>
   - Argument

   <var_name>

   Same variable list as *Read HART Variable* command

   <value>

   New value in string

10. New values will not be sent to transmitter until corresponding write command is not sent.

11. Send HART Command
    - Syntax

    HART_SEND_CMD <command_no>
    - Argument

    <command_no>

    Number of command to be sent

Example:

- Connect to a HART transmitter

```
=>LOWER_FUNC MADC              # Switch to mADC measure function

=>LOOP_POWER 1                 # Enable loop power

=>HART_CONNECT 0               # Connect to transmitter at bus address 0

                               # Need to wait at about 5 seconds to finish all data fetching
operations

=>HART_STATUS?                 # Get HART status
CONNECTED

=>HART_READ? PV_UNIT           # Read PV unit
12,kPa

=>HART_READ? PV_VAL            # Read PV Value
1.000123E+03,kPa
```

- Set PV unit

```
=>HART_AUTO_UPDATE 0           # Disable dynamic variable auto updating

=>HART_WRITE PV_UNIT 6         # Write new value 6 (psi) to PV_UNIT

=>HART_SEND_CMD 44             # Send command 44 to write PV_UNIT to transmitter

=>HART_SEND_CMD 15             # Send command 15 to update device information

=>HART_SEND_CMD 14             # Send command 14 to update PV transducer information

                               # Wait at least 3 seconds to complete these 3 commands

=>HART_AUTO_UPDATE 200         # Re-enable dynamic variable updating every 200ms.
```

- PV zero trim

```
=>HART_SEND_CMD 43             # Set PV zero
```

- D/A trim

```
=>HART_WRITE PV_FIXED_CURRENT 4

=>HART_SEND_CMD 40              # Fix PV analog output at 4mA

=>HART_WRITE MEASURED_PV_CURRENT 3.999

=>HART_SEND_CMD 45              # Trim 4mA with measured current value (3.999mA)

=>HART_WRITE PV_FIXED_CURRENT 20

=>HART_SEND_CMD 40              # Fix PV analog output at 20mA

=>HART_WRITE MEASURED_PV_CURRENT 19.999

=>HART_SEND_CMD 46              # Trim 20mA with measured current value (19.999mA)

=>HART_WRITE PV_FIXED_CURRENT 0

=>HART_SEND_CMD 40              # Return to normal analog output mode
```

- LRV/URV trim with PV

```
=>HART_SEND_CMD 37              # Trim LRV with current PV value

=>HART_SEND_CMD 36              # Trim URV with current PV value
```

The Battery

The Product features a rechargeable battery. Charge the battery while it is inside or outside of the Product. This allows you to have more than one fully-charged battery on hand.

Charge the Battery

Before the Product is used, charge the battery. To charge the battery while in the Product, connect the battery charger to the Product.

The battery fully charges in 8 hours.

To charge the battery outside of the Product, see Figure 6 for battery access:

1. Place the Product face down.
2. Lift the Product stand to expose all screws.
3. Remove the six screws with a Phillips screwdriver.
4. Pull off the back.
5. Remove the battery.
6. Connect the battery charger to the input on the battery.
7. The battery charge indicator (top-right of display) shows while the battery is outside of the Product. Solid green bars show the level of charge on the battery. When all bars are illuminated and solid, the battery is fully charged. The bars progressively illuminate to show that the battery is currently charging.

Battery Life

The battery charge indicator shows on the upper right of the display.

Table 21 shows the typical operation time for a new, fully charged battery. Product performance meets its specification until the battery charge indicator reads empty.

Table 21. Typical Battery Life

Operation Modes	Battery Life
Measure, continuous	20 Hours
Measure and source, with loop power on, continuous	10 Hours
Typical intermittent operation	>16 Hours

Battery Replacement

Replace the battery when it no longer holds a charge for the rated interval. The battery normally lasts for up to 300 charge/discharge cycles. To order a replacement battery, see *Contact Fluke* and *User-Replaceable Parts*.

Note

Take spent batteries to a qualified recycler or hazardous materials handler for disposal. Contact an authorized Fluke Service Center for recycling information.

To replace the battery, see Figure 6:

1. Push SETUP and select Maintenance.
2. Push F1 (**Exhaust**) to release Product internal pressure.
3. Turn Off the Product.
4. Remove test leads.
5. Make sure the Product is unplugged from its charger.
6. Turn over the Product.
7. Lift the bail and remove the six screws with a Phillips screwdriver.
8. Lift off the battery cover.
9. Replace the battery.
10. Replace the back cover and screws.

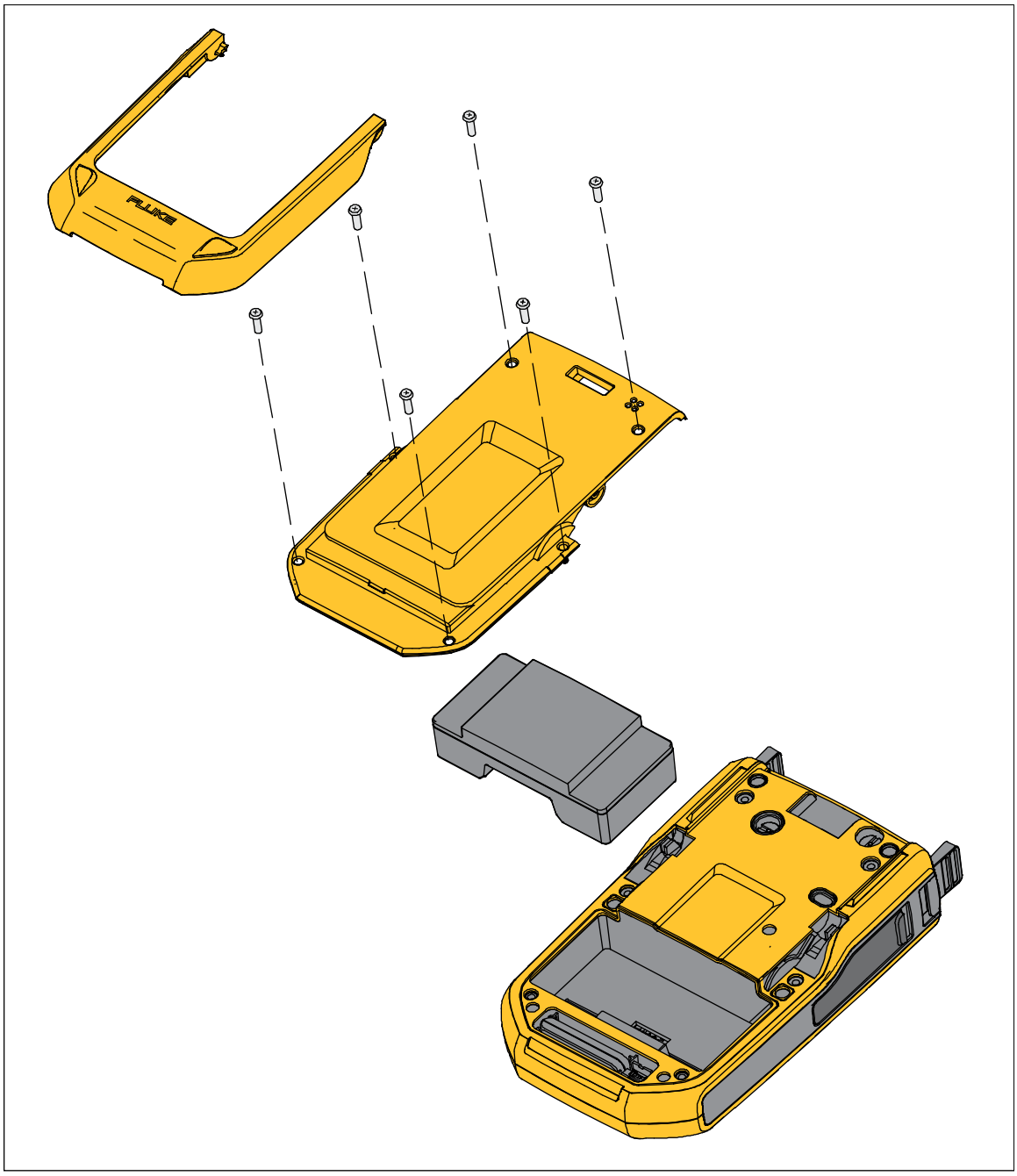

idj007.emf

Figure 6. Replace the Battery

Maintenance

⚠⚠ Warning

To prevent possible electrical shock, fire, or personal injury:

- **Have an approved technician repair the Product.**
- **Do not operate the Product with covers removed or the case open. Hazardous voltage exposure is possible.**
- **Remove the input signals before you clean the Product.**
- **Use only specified replacement parts.**
- **Run "Exhaust" before you open the battery door.**

Clean the Product

Clean the Product and pressure modules with a soft cloth dampened with water or water and mild detergent.

⚠Caution

To prevent possible damage to the Product, do not use solvents or abrasive cleansers.

Clean the Pump Valve

1. Remove the battery door (see *Battery Replacement*) and locate the pump valve caps, see Figure 7 (❶).
2. Use a small screwdriver to remove the two valve retention caps located in the oval shaped opening on the underside of the Product.
3. Gently remove the spring and O-ring assembly.
4. Set aside the valve assemblies and clean out the valve body with a cotton swab soaked in isopropyl alcohol (IPA).
5. Repeat this process several times with a new cotton swab until there is no sign of residue.
6. Run the pump for a few seconds.
7. Clean the O-ring assembly and O-ring on the retention caps with IPA and inspect the O-rings closely for any cuts, nicks, or wear. Replace if necessary.
8. Inspect the springs for wear or loss of tension. They should be approximately 3.8 mm (0.15 in) long in the relaxed state. If they are shorter, the O-ring will not seat properly. Replace if necessary.
9. Clean and inspect all parts and then reinstall the O-ring and spring assemblies into the valve body.
10. Reinstall the retention caps and gently tighten the cap.
11. Seal the output of the Product and pump up the unit to at least 50 % of its rated pressure.
12. Release the pressure and repeat several times to ensure that the O-rings seat properly.
13. The Product is now ready for use.

Replace the Pump Filters

1. Remove the battery door (see *Battery Replacement*) and locate the two filter caps, see Figure 7 (❷).
2. Use a screwdriver to push the pressure release pin on the screws before removing.
3. Unscrew the two filter caps.
4. Remove the filters and replace if necessary.
5. Clean the O-rings on the filter caps with IPA and inspect the O-rings closely for any cuts, nicks, or wear. Replace if necessary.
6. Reinstall the filter caps.
7. Gently tighten the caps.

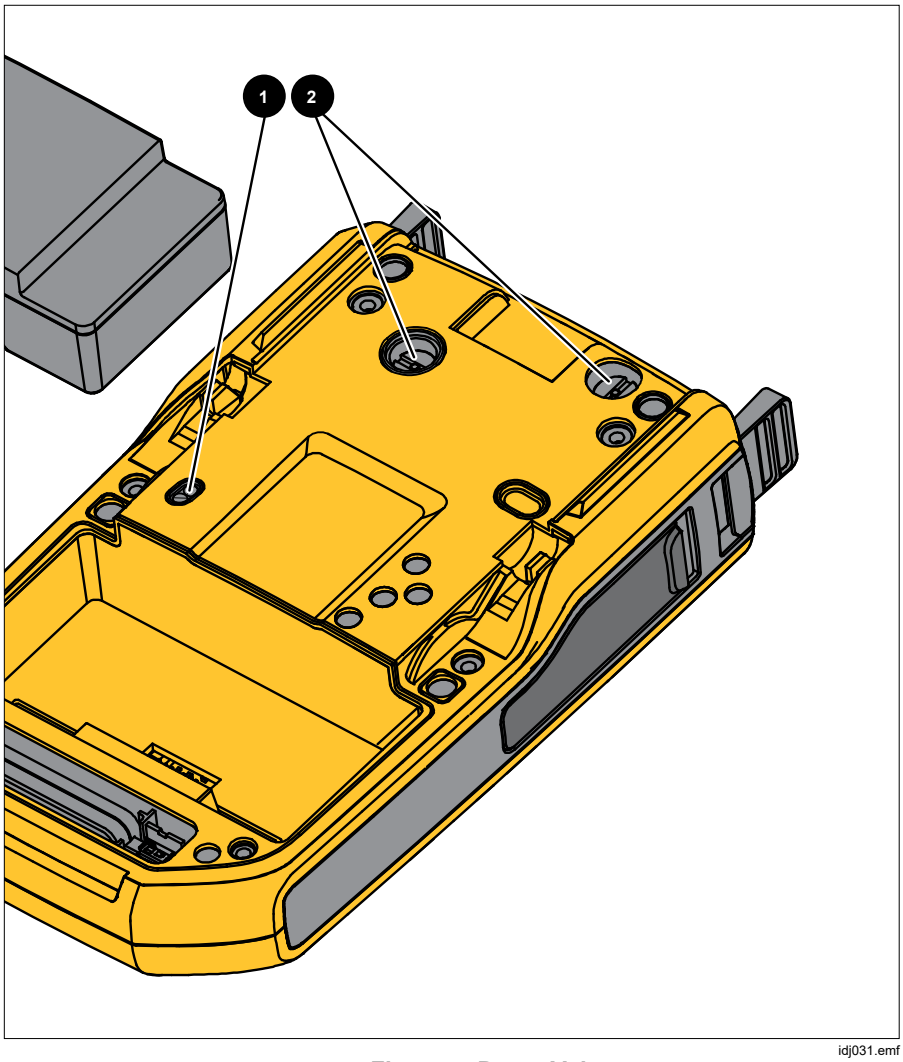

idj031.emf

Figure 7. Pump Valve

In Case of Difficulty

⚠⚠ Warning

To prevent possible electrical shock, fire, or personal injury, do not use the Product if it operates abnormally. Protection may be impaired. When in doubt, have the Product serviced.

If the Product does not turn on, check the battery charge. Disconnect the battery charger. If the Product receives power, the power button is illuminated. If the button is illuminated, but the Product does not turn on, have the Product serviced. See *Contact Fluke*.

Update Product Firmware

To update the Product firmware version:

1. Turn on the Product.
2. Connect the USB cable (provided) to a PC (see Figure 8).
3. Go to www.fluke.com/productinfo.
4. Click on “Find your software”.
5. Search for “729”.
6. On the results page, select the **Software Downloads** tab.
7. Click on the necessary software link.
8. Read the instructions on this page.
9. Download the Firmware file.
10. Click on the Firmware **exe** file.

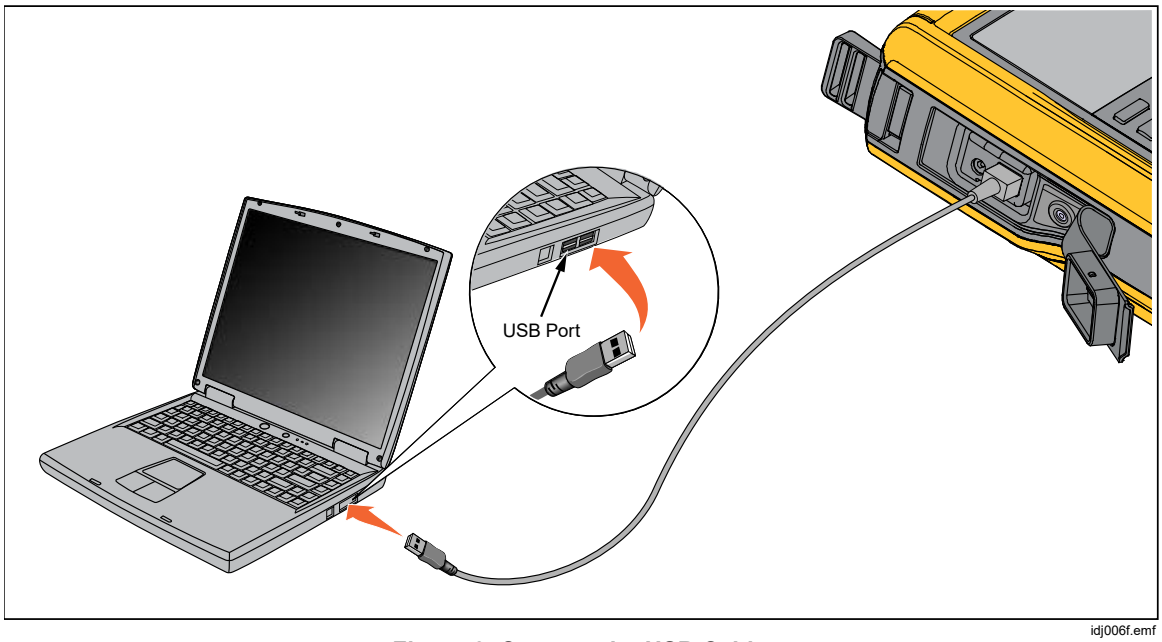

Figure 8. Connect the USB Cable

User-Replaceable Parts and Accessories

Table 22 is a list of replacement parts and accessories.

Table 22. User-Replaceable Parts and Accessories

Description	Quantity	Fluke P/N
BP729, Rechargeable Li-ion Battery	1	4817068
Power Charger, AC/DC	1	4878453
Mains Adapters International (Except For China)	1	2441372
Line Cord, Jumper (Except China)	1	4542113
Power Cable (China Only)	1	2716592
USB Cable Assembly	1	4499448
AC280, Suregrip Hook Clips	1	1610115
Alligator Clip Set	1	3765923
Cable Assembly, Stackable Test Leads Set	1	3669716
TP220, Test Probes	1	3971276
Hose, Nylon	3.3 ft	4366602
Fitting, 1/8" NPT-Female X 1/4" NPT-Female	1	4366616
Fitting, 1/8" Tube x 1/8" NPT-Male	2	4551693
Fitting, 1/8" NPT-Female x M20-Female	1	4366633
Fitting, 1/4" BSP-Female x 1/8" NPT-Female	1	4366640
PTFE Tape	1	3714052
Filter	2	4883735
Softcase	1	4860790
Softcase Accessory	1	4821227
Shoulder Strap	1	4850059
Hanger, Dual Magnet	1	4357287
Magnet Strap	2	4329190
Strap - 9 in	1	669960
Liquid Contaminant Trap (optional)	1	4380747
Calibration Certificate	1	-
Printed Multilingual Safety Information	1	4864397
Warranty Card	1	-