FLUKE®

730G, 730GA, 730RG

Pressure Calibrators

Users Manual

October 2018
© 2018 Fluke Corporation. All rights reserved. Specifications are subject to change without notice.
All product names are trademarks of their respective companies.

LIMITED WARRANTY AND LIMITATION OF LIABILITY

Each Fluke product is warranted to be free from defects in material and workmanship under normal use and service. The warranty period is three years and begins on the date of shipment. Parts, product repairs, and services are warranted for 90 days. This warranty extends only to the original buyer or end-user customer of a Fluke authorized reseller, and does not apply to fuses, disposable batteries, or to any product which, in Fluke's opinion, has been misused, altered, neglected, contaminated, or damaged by accident or abnormal conditions of operation or handling. Fluke warrants that software will operate substantially in accordance with its functional specifications for 90 days and that it has been properly recorded on non-defective media. Fluke does not warrant that software will be error free or operate without interruption.

Fluke authorized resellers shall extend this warranty on new and unused products to end-user customers only but have no authority to extend a greater or different warranty on behalf of Fluke. Warranty support is available only if product is purchased through a Fluke authorized sales outlet or Buyer has paid the applicable international price. Fluke reserves the right to invoice Buyer for importation costs of repair/replacement parts when product purchased in one country is submitted for repair in another country.

Fluke's warranty obligation is limited, at Fluke's option, to refund of the purchase price, free of charge repair, or replacement of a defective product which is returned to a Fluke authorized service center within the warranty period.

To obtain warranty service, contact your nearest Fluke authorized service center to obtain return authorization information, then send the product to that service center, with a description of the difficulty, postage and insurance prepaid (FOB Destination). Fluke assumes no risk for damage in transit. Following warranty repair, the product will be returned to Buyer, transportation prepaid (FOB Destination). If Fluke determines that failure was caused by neglect, misuse, contamination, alteration, accident, or abnormal condition of operation or handling, including overvoltage failures caused by use outside the product’s specified rating, or normal wear and tear of mechanical components, Fluke will provide an estimate of repair costs and obtain authorization before commencing the work. Following repair, the product will be returned to the Buyer transportation prepaid and the Buyer will be billed for the repair and return transportation charges (FOB Shipping Point).

THIS WARRANTY IS BUYER'S SOLE AND EXCLUSIVE REMEDY AND IS IN LIEU OF ALL OTHER WARRANTIES, EXPRESS OR IMPLIED, INCLUDING BUT NOT LIMITED TO ANY IMPLIED WARRANTY OF MERCHANTABILITY OR FITNESS FOR A PARTICULAR PURPOSE. FLUKE SHALL NOT BE LIABLE FOR ANY SPECIAL, INDIRECT, INCIDENTAL OR CONSEQUENTIAL DAMAGES OR LOSSES, INCLUDING LOSS OF DATA, ARISING FROM ANY CAUSE OR THEORY.

Since some countries or states do not allow limitation of the term of an implied warranty, or exclusion or limitation of incidental or consequential damages, the limitations and exclusions of this warranty may not apply to every buyer. If any provision of this Warranty is held invalid or unenforceable by a court or other decision-maker of competent jurisdiction, such holding will not affect the validity or enforceability of any other provision.

Fluke Corporation
P.O. Box 9090
Everett, WA 98206-9090
U.S.A.

Fluke Europe B.V.
P.O. Box 1186
5602 BD Eindhoven
The Netherlands

ООО «Флюк СИАЙЭС»
125167, г. Москва,
Ленинградский проспект дом 37,
корпус 9, подъезд 4, 1 этаж

11/99

Table of Contents

Title	Page
Introduction	1
How to Contact Fluke	1
Safety Information	2
Standard Equipment	4
Display	5
Control Panel	6
Function Keys	6
Connections	7
Connect and Zero the Product	8
Menus	9
Main Menu	9
Instrument Setup	9
Date/Time	10
Measure Mode Menu	10
Volt Mode	11
mA Mode	11
mA+24V Mode	12
Leakage Test	12
Error Test	13
Min Max Value	14
Switch Test	14
HART Communication (HART)	15
HART Connections Internal Loop Power, Internal Resistance	18
External Loop Power, Internal Resistance	19
External Loop Power, External Resistance	20
Data Memory	21
Accessories	21
Maintenance	21
Clean the Product	22
Charge the Battery	22
Replace the Battery	23
Specifications	24
Accuracy Specifications	24
Mechanical Specifications	25
Electrical Specifications	25
Environmental Specifications	25
Safety	26
Ranges and Resolutions	27

Introduction

The Fluke 730G, 730GA, and 730RG Pressure Calibrators (the Product) are portable field pressure calibration tools for lab or field use. The battery-operated product performs pressure calibration of transmitters, pressure switches, pressure sensors, and gauges with pressure calibration software. The Product also supplies basic HART® communicator functions when used with HART-capable transmitters.

Key features and benefits include:

- Pressure calibration of transmitters, pressure switches and pressure gauges.
- Test and calibrate pressure sensors, transmitters, and other pressure instruments.
- HART (Highway Addressable Remote Transducer) communication to configure trim on HART smart-pressure transmitters.
- Provide Loop Power and simultaneously measure mA output from a connected device.
- Measure mA and voltage.
- An internal HART resistor to turn on or off when used with HART transmitters.

How to Contact Fluke

To contact Fluke, call one of the following telephone numbers:

- Technical Support USA: 1-800-44-FLUKE (1-800-443-5853)
- Calibration/Repair USA: 1-888-99-FLUKE (1-888-993-5853)
- Canada: 1-800-36-FLUKE (1-800-363-5853)
- Europe: +31 402-675-200
- Japan: +81-3-6714-3114
- Singapore: +65-6799-5566
- China: +86-400-921-0835
- Brazil: +55-11-3530-8901
- Anywhere in the world: +1-425-446-5500

Or, visit Fluke's website at www.fluke.com.

To register your product, visit http://register.fluke.com.

To view, print, or download the latest manual supplement, visit http://us.fluke.com/usen/support/manuals.

To request a printed manual, vist www.fluke.com/productinfo.

Safety Information

A **Warning** identifies hazardous conditions and procedures that are dangerous to the user. A **Caution** identifies conditions and procedures that can cause damage to the Product or the equipment under test.

⚠⚠ Warning

To prevent possible electrical shock, fire, or personal injury and for safe operation of the Product:

- **Read all safety information before you use the Product.**
- **Carefully read all instructions.**
- **Do not use the Product around explosive gas, vapor, or in damp or wet environments.**
- **Do not alter the Product and use only as specified, or the protection supplied by the Product can be compromised.**
- **Do not apply more than the rated voltage, between the terminals or between each terminal and earth ground.**
- **Do not touch voltages >30 V ac rms, 42 V ac peak, or 60 V dc.**
- **Do not use the Product if it is damaged.**
- **Disable the Product if it is damaged.**
- **Do not use the Product if it operates incorrectly.**
- **Use the correct terminals, function, and range for measurements.**
- **Remove all probes, test leads, and accessories before the battery door is opened.**
- **The battery door must be closed and locked before you operate the Product.**
- **Examine the case before you use the Product. Look for cracks or missing plastic. Carefully look at the insulation around the terminals.**
- **Do not use test leads if they are damaged. Examine the test leads for damaged insulation, exposed metal, or if the wear indicator shows. Check test lead continuity.**
- **Only assemble and operate high-pressure systems if you know the correct safety procedures. High-pressure liquids and gases are hazardous and the energy from them can be released without warning.**
- **Have an approved technician repair the Product.**
- **Do not disassemble or crush battery cells and battery packs.**
- **Batteries contain hazardous chemicals that can cause burns or explode. If exposure to chemicals occurs, clean with water and get medical aid.**
- **Do not put battery cells and battery packs near heat or fire. Do not put in sunlight.**
- **Use only Fluke approved power adapters to charge the battery.**
- **Disconnect the battery charger and move the Product or battery to a cool, nonflammable location if the rechargeable battery becomes hot (>50 °C) during the charge period.**
- **Replace the rechargeable battery after 5 years of moderate use or 2 years of heavy use. Moderate use is defined as recharged twice a week. Heavy use is defined as discharged to cutoff and recharged daily.**
- **Do not disassemble the battery.**
- **Do not short the battery terminals together.**

- **If the display reads “OL” the range limit is exceeded and the pressure source must immediately be reduced. The Product shows “OL” when the pressure exceeds 110 % of the nominal range of the sensor. Pressure sensors can be damaged and personnel injury can occur due to improper application of pressure.**
- **Push F1 to zero the pressure sensor when vented to atmospheric pressure.**

⚠ Caution

To prevent damage to the Product or to equipment under test:

- **If the display reads “OL” the range limit is exceeded and the pressure source must immediately be reduced.**
- **Always apply thread seal tape to the threads of the gauge.**
- **Do not exceed the maximum torque allowed. Maximum torque allowed is 13.5 Nm = 10 lbft.**

Note

Before you use the Product for the first time, see Charge the Battery*.*

Table 1 lists the symbols that can be used on the Product or in this manual.

Table 1. Symbols

Symbol	Description
	Consult user documentation.
	WARNING. RISK OF DANGER.
	WARNING. HAZARDOUS VOLTAGE. Risk of electric shock.
	Pressure.
	Battery status. Battery charging when animated.
	On/Off
	Conforms to European Union directives.
	Conforms to relevant Australian Safety and EMC standards.
	Conforms to relevant South Korean EMC standards.
 Li-ion	This Product contains a lithium-ion battery. Do not mix with the solid waste stream. Spent batteries should be disposed of by a qualified recycler or hazardous materials handler per local regulations. Contact your authorized Fluke Service Center for recycling information.
	This product complies with the WEEE Directive marking requirements. The affixed label indicates that you must not discard this electrical/electronic product in domestic household waste. Product Category: With reference to the equipment types in the WEEE Directive Annex I, this product is classed as category 9 "Monitoring and Control Instrumentation" product. Do not dispose of this product as unsorted municipal waste.

Standard Equipment

Table 2 shows the standard equipment that comes with the Product.

Table 2. Standard Equipment

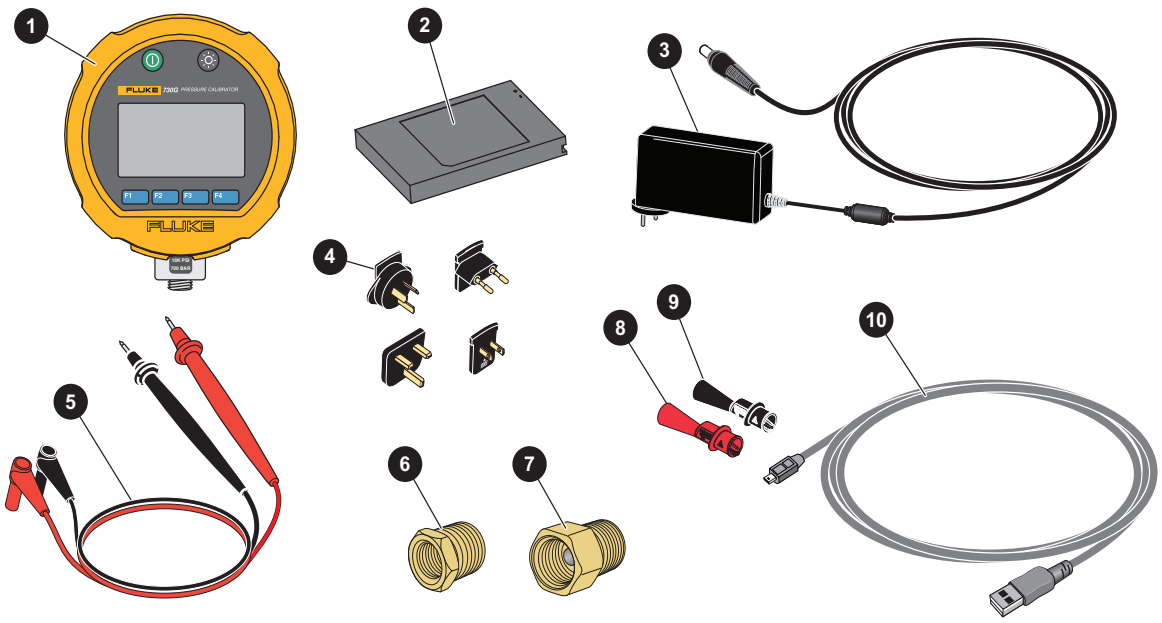

Item	Description	Item	Description
1	The Product	7	Fitting, 1/4 in NPT-Female x 1/4 in BSP-Male
2	Rechargeable lithium-ion battery pack	8	Alligator clip red
3	AC power supply/battery charger	9	Alligator clip black
4	Universal power adapters (not available in all countries)	10	USB cable
5	Test lead set	Not shown	Traceable calibration report with data
6	Fitting, 1/4 in NPT-Female X M20-Male		Safety Information and Quick Reference Guide

Display

Table 3 shows the items on the display.

Table 3. Display

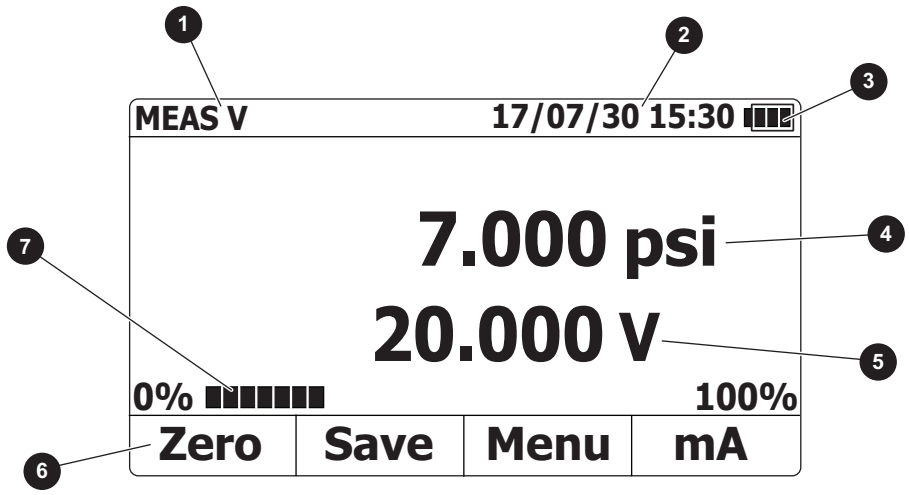

Item	Description	Item	Description
❶	Mode display	❺	Measured voltage, current, or temperature value
❷	Time and date display	❻	Soft keys
❸	Battery status	❼	Pressure range bar graph
❹	Measured pressure value		

Control Panel

Use the control panel to select functions and options. Table 4 lists the functions of the buttons on the control panel.

Table 4. Control Panel

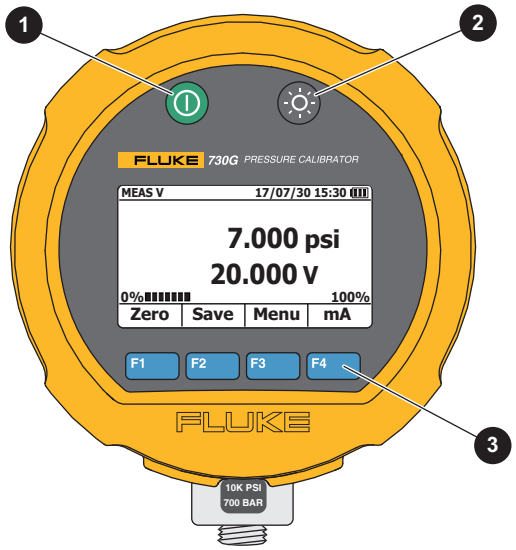

Item	Description	Function
1	Power button	Push to turn on or off the Product.
2	Backlight button	Push to turn on or off the backlight of the display.
3	Function keys	Push to perform the function listed on the softkey above the function key. See *Function Keys*.

Function Keys

Use the function keys to change parameters or select functions and options. Table 5 lists the main functions of the function keys.

Table 5. Function Keys

Button	Home Screen Function	Menu Function
F1	Zero the pressure value. See *Connect and Zero the Product*.	Select the highlighted item to: Open a submenu. Or Save the change and go back to the previous screen.
F2	Take a screen shot of the display. See *Data Memory*.	Highlight the previous item in the menu.
F3	Open the main menu.	Highlight the next item in the menu.
F4	Toggle between current measurement and voltage measurement.	Go back to the previous screen.

Connections

Table 6 shows the connections of the Product.

Table 6. Connections



Item	Description	Function
1	COM port	Provide common ground.
2	V or mA port	Measure mA or V dc. Or Supply loop power.
3	Ac power supply/battery charger input	Supply the Product with power. Or Charge the battery while the battery is installed in the Product.
4	USB input	Communicate between the Product and a PC.
5	Pressure port	Connect the Product to a device that supplies pressure.

Connect and Zero the Product

Connect and zero the Product prior to use and calibration.

To set up the Product:

1. Wrap the threads of the pressure port with PTFE tape.
2. Connect the pressure port of the Product to an output of an approved pump. See Figure 1.

   Note

   Follow the directions of the manufacturer of the pump for use with the Product.
3. Connect a device to test to another output of the pump. See Figure 1.
4. Vent the pressure of the pipe.
5. Push F1 to zero the Product.

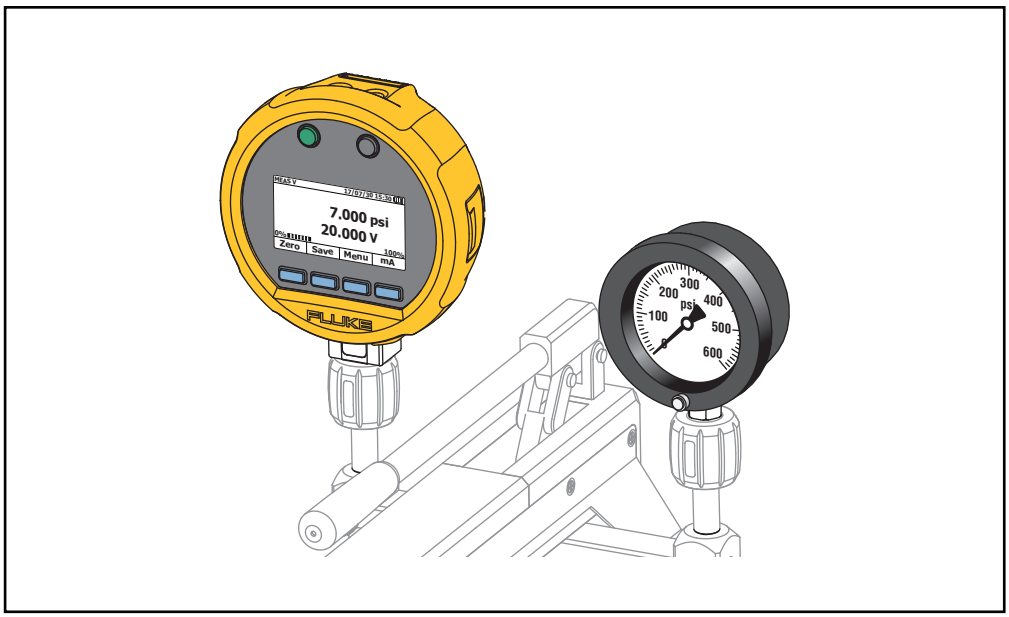

Figure 1. Product Setup with Pump and Gauge

Menus

Use the menus to change and view settings.

Main Menu

Table 7 lists the submenus available in the main menu.

Table 7. Main Menu

Submenu	Description
Measure Mode	Set the measurement mode. See *Measure Mode Menu*.
Leakage Test	Test a device for leaks. See *Leakage Test*.
Error Test	Perform an error test on transmitters. See *Error Test*.
Min Max Val	Display the maximum or minimum pressure and current, voltage, or temperature values. See *Min Max Value*.
Switch Test	Calibrate a pressure switch and save the results of the test. See *Switch Test*.
HART Comm. (HART Communication)	Communicate with a HART transmitter. See *HART Communication (HART)*.
Data Memory	View data stored in memory. See *Data Memory*.
Instru. Setup (Instrument Setup)	Set user preferences and view information about the Product. See *Instrument Setup*.

Instrument Setup

Use the Instrument Setup (Setup) menu to set user preferences and view information about the Product. Table 8 lists the options in the Setup menu.

Table 8. Setup Menu

Item	Option	Description
Contrast	**-**	Decrease the contrast of the display.
	+	Increase the contrast of the display.
Pressure Unit	<options>	Set the pressure units to show on the display. See *Specifications* for a list of available units.
Date/time	<options>	Set the date and time. See *Date/Time*.
Beeper	**On**	Enable the beeper function. With the beeper enabled, the beeper beeps: Once when you push a button. Twice for an invalid selection.
	Off	Disable the beeper function.

Table 8. Setup Menu (cont.)

Item	Option	Description
Power off	**Never**	Set the time after which the Product automatically turns off when there is no user interaction.
	5 minutes	
	15 minutes	
	30 minutes	
Factory mode	--	Reset the Product to original settings.
Language	<options>	Set the language.
Device info.	--	Show the Product information on the display.

Date/Time

To set the date and time:

1. Select **Menu** > **Instrument Setup** > **Date/time**.
2. Set each field:
   a. Push F2 / F3 to highlight the field to change.
   b. Push F1 to select the field.
   c. Push F2 (**-**) to decrease the value, or push F3 (**+**) to increase the value.
   d. Push F1 to set the value.
   e. Push F4 to return to the previous screen.
3. Push F4 twice to set the changes and return to the previous menu.

Measure Mode Menu

Table 9 lists the options in the Measure Mode menu.

Table 9. Measure Mode

Item	Description
Volt	Measure V dc. See *Volt Mode*.
mA	Measure mA. See *mA Mode*.
mA+24V	Measure mA and supply 24 V loop power. See *mA+24V Mode*.
Temperature	Measure internal temperature of the Product. In Temperature mode, the Product shows the internal temperature of the Product and the pressure measurement.

Volt Mode

In Volt mode, the Product shows the pressure and loop voltage measurements. Figure 2 shows the voltage measurement connections.

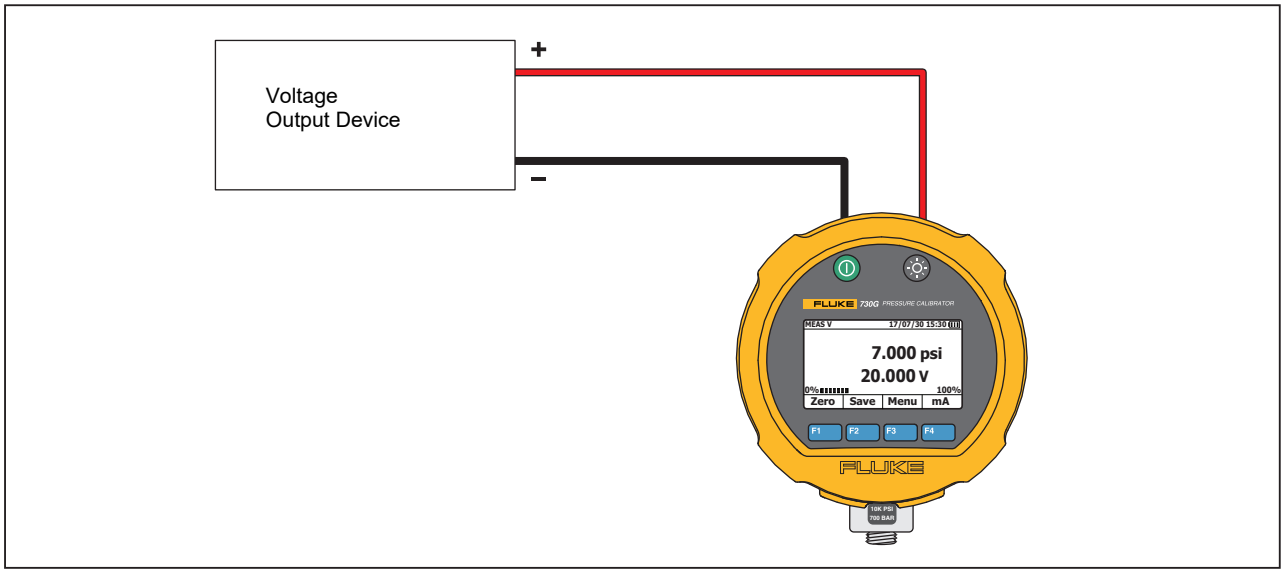

Figure 2. Volt dc Measurement Connections

mA Mode

In mA mode, the Product shows the pressure and loop current measurements without 24 V power enabled. Figure 3 shows the mA measurement connections with a non-HART device.

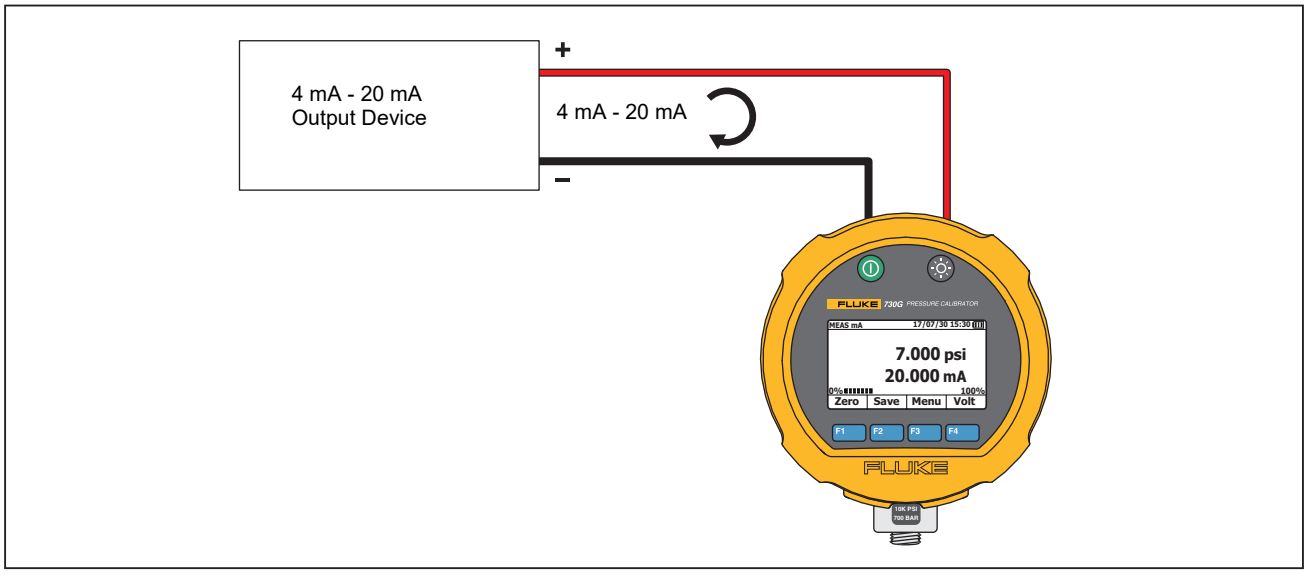

Figure 3. mA Measurement Connections with a non-HART device

mA+24V Mode

In mA+24V mode, the Product outputs 24 V dc as it shows the pressure and loop current measurements. Use this mode to power a transmitter without a separate power supply. Figure 4 shows the mA+24V Mode connections.

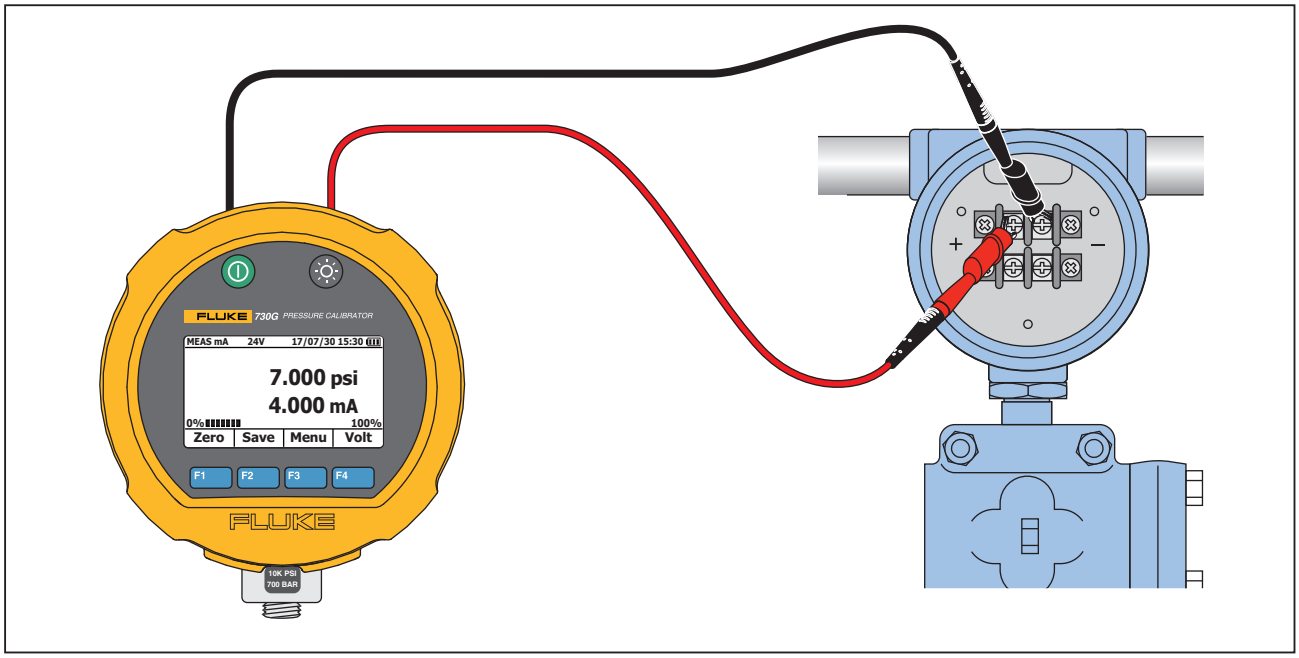

Figure 4. mA Measurement with 24 V Loop Power Connections

Leakage Test

To do a leakage test:

1. Connect and zero the Product. See *Connect and Zero the Product*.
2. Select **Menu** > **Leakage Test**.
3. To start the test, push **F1**.
4. To stop the test, push **F2**.

The Product shows the result. The results include time elapsed for the test. The leakage rate unit shows as */min. Figure 5 shows the formula used to calculate the leakage rate.

$$\text{Leakage Rate} = \frac{\text{Pressure}_{start} - \text{Pressure}_{stop}}{\text{time (minute)}}$$

Figure 5. Leakage Rate Calculation

Error Test

Do an error test to check for pressure leaks in the device under test (DUT). Table 10 lists the options in the Error Test menu.

Table 10. Error Test

Item	Option	Description
Cfg. M (Configure Measurement Mode)	**Volt**	Set the measurement mode to use for the error test.
	mA	
	mA+24V	
Cfg. P (Configure Pressure Range)	**Set 100% Pressure Value**	Set the pressure range to use for the error test.
	Set 0% Pressure Value	
Cfg. E (Configure Electrical Range)	**Set 100% Volt or mA Value**	Set the electrical range to use for the error test based on the selection of the measurement mode.
	Set 0% Volt or mA Value	

To do an error test:

1. Connect and zero the Product. See *Connect and Zero the Product*.
2. Select **Menu** > **Error Test**.
3. Configure the measurement mode.
   a. Push F1 to set the measurement mode.
   b. Push F2 / F3 to highlight the unit of measure to test.
   c. Push F1 to set the value and return to the previous screen.
4. Configure the pressure and electrical ranges.
   a. Push F2 to set the pressure range or F3 to set the electrical range.
   b. Set each value.
      1. Push F2 / F3 to highlight the value to change.
      2. Push F1 to select the value.
      3. Push F2 / F3 to highlight the numerical value to change.
      4. Push F1 to select the numerical value.
      5. Push F2 to decrease the value, or push F3 to increase the value.
      6. Push F1 to set the value.
      7. Push F4 to set the change and return to the previous screen.
   c. Push F4 twice to set the changes and return to the previous menu.

The results automatically show on the display. The results include the pressure measured, the electrical value measured, and the error percentage.

Figure 6 shows the formula used to calculate the current error percentage.

$$\text{Error \%} = \frac{\text{Pressure}_{measure} - \text{Pressure}_{4mA}}{\text{Pressure}_{20mA} - \text{Pressure}_{4mA}} - \frac{\text{Current}_{measure} - 4\text{ mA}}{16\text{ mA}}$$

Figure 6. Current Error Percentage Calculation

Figure 7 shows the formula used to calculate the voltage error percentage.

$$\text{Error \%} = \frac{\text{Pressure}_{measure} - \text{Pressure}_{1V}}{\text{Pressure}_{5V} - \text{Pressure}_{1V}} - \frac{\text{Voltage}_{measure} - 1\text{ V}}{5\text{ V} - 1\text{ V}}$$

Figure 7. Voltage Error Percentage Calculation

Min Max Value

To view the minimum or maximum pressure, electrical, and temperature values:

1. Connect and zero the Product.
2. Select **Menu** > **Min Max Val**.
3. Start a pressure test.

   The minimum measured values show on the display while the test runs.
4. Push **F1** to view the maximum measured values on the display. Push **F2** to view the minimum values again.
5. Push **F3** to discard the saved measured values and save new minimum and maximum values.

Switch Test

Use the Product to calibrate a pressure switch.

To do a pressure switch test:

1. Connect and zero the Product. See *Connect and Zero the Product* and Figure 8.
2. Select **Menu** > **Switch Test**.

   The Product defaults to test a normal open type switch. To toggle between normal open and normal closed type switches, push **F1** (**Re-do**).
3. Use the pump to increase the pressure to a selected value.

   When the pressure reaches the selected value, the switch closes and the Product saves the pressure value. For a normal closed type switch, the switch opens and the Product saves the pressure value.
4. Use the pump to decrease the pressure to a selected value.

   When the pressure reaches the selected value, the switch opens and the Product saves the pressure value. For a normal closed type switch, the switch closes and the Product saves the pressure value.

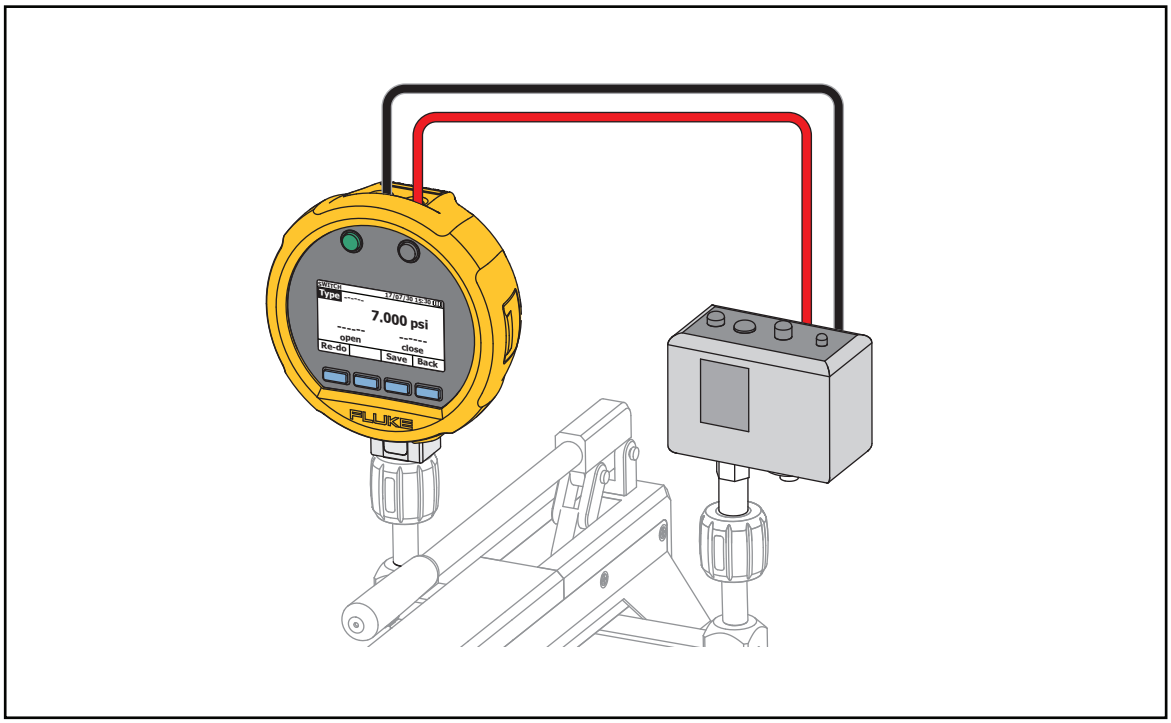

Figure 8. Switch Connection

HART Communication (HART)

Use the Product to communicate with HART devices.

Auto power off is disabled when you use the HART menus. When you exit the HART menus, auto power off returns to its previous state.

Note

Loop output trim is supported for transmitter devices, but it is not supported for actuator devices.

Table 11 lists the items in the HART menu.

Table 11. HART Menu

Item	Option	Description
Select	**Cont. (Continue)**	View the measured values of the HART device connected to the Product. See Table 12.
	Svc. (Service)	Service the HART device. See Table 13.
	Setup	Set up the HART device. See Table 14.
	Back	Return to previous screen.
24V On/ **24V Off**	--	Toggles on and off 24V loop power. When the soft key shows **24V Off** and **24V** shows on the top of the display, the Product supplies loop power. When the soft key shows **24V On**, use an external source to supply loop power.
R On/ **R Off**	--	Toggles on and off the internal HART resistor of the Product. When the soft key shows **R Off** and **R** shows on the top of the display, the Product supplies 250 Ω resistance to the circuit. When the soft key shows **R On**, use an external 250 Ω resistance.
Back	--	Return to previous screen.

Table 12 lists the items in the Cont. (Continue) menu. The Cont. menu shows the measured values of the HART device that is connected to the Product.

Table 12. Cont. (Continue) Menu

Item	Description
Tag	View the HART device tag.
PV	View the primary variable measured by the HART device.
PVAO	View the primary variable analog output.
PV URV	View the upper range value of the primary variable.
PV LRV	View the lower range value of the primary variable.
PV % Range	View the percent of PV to PV range. [(PV - PV LRV) / (PV URV - PV LRV)] * 100
SV	View the secondary variable measured by HART device.
TV	View the tertiary variable measured by HART device.
QV	View the quaternary variable measured by HART device.

Table 13 lists the items in the Svc. (Service) menu.

Table 13. Service Menu for HART Device

Item	Description
Loop Test	Tests the output loop of the HART device.
Output Trim	Adjust the output loop of the HART device.
Pressure Zero Trim	Set the zero point of the primary variable.
PV Re-arrange/Trim	Set the PV URV and PV LRV.

Table 14 lists the items in the Setup menu. Use the Setup menu to configure the HART device or to view fields set by the HART device.

Table 14. Setup Menu

Item	Option	Description
Basic	**PV Unit**	View the unit of the primary variable.
	PV URV	View the upper range value of the primary variable.
	PV LRV	View the lower range value of the primary variable.
	Damping	View the damping time.
	Transfer Func. (Transfer Function)	View the output transfer function.
Sensor	**Tag**	View the tag of the sensor.
	Sensor S/N	View the serial number of the sensor.
	Sensor UTL	View the upper tranducer limit of the sensor.
	Sensor LTL	View the lower tranducer limit of the sensor.
	Sensor Span	View the minimum span of the sensor.
Device ID	**Tag**	View the device tag.
	Message	Set and view a message in a string format.
	Descriptor	Set and view a descriptor in a string format.
	Device	View the device name.
	Date	View the date information.
HART Info.	**Alarm State**	View the alarm output level of high or low.
	Write Protect	View the write protect status as yes or no.
	Polling Addr. (Polling Address)	View the polling address.
	Preambles	View the minimum preamble number to use to be able to communicate with the HART device.
	Protocol Ver. (Protocol Version)	View the protocol major version number.

HART Connections Internal Loop Power, Internal Resistance

To use the Product in-circuit to provide 24 V loop power and 250 Ω resistance:

1. Connect the Product to the HART device. See Figure 9.
2. Select **Menu** > **Measure Mode** > **HART Comm.**.
3. Select **24V On** to supply internal loop power. When the soft key shows **24V Off** and **24V** shows on the top of the display, the Product supplies loop power.
4. Select **R On** to supply internal resistance. The soft key shows **R Off** and **R** shows on the top of the display when the Product supplies 250 Ω resistance to the circuit.
5. Select **Poll**.
6. Select **Select**.
7. When device shows on the display, select **Select** again.

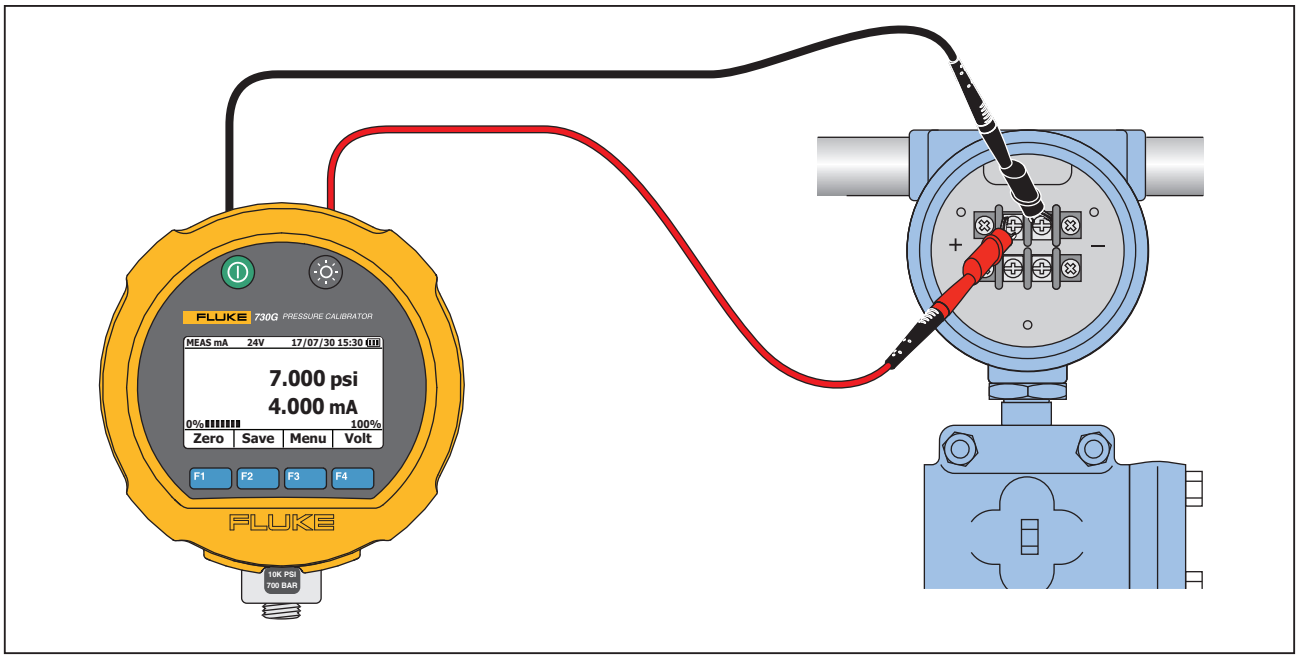

Figure 9. Internal Loop Power, Internal Resistance

External Loop Power, Internal Resistance

To use the Product in-circuit to provide 250 Ω resistance with an external 24 V loop power supply:

1. Connect the Product to the HART device. See Figure 10.
2. Select **Menu** > **Measure Mode** > **HART Comm.**.
3. Select **24V Off** to disable internal 24V. When the soft key shows **24V On**, use an external source to supply loop power.
4. Select **R On** to enable internal resistance. The soft key shows **R Off** and **R** shows on the top of the display when the Product supplies 250 Ω resistance to the circuit.
5. Select **Poll**.
6. Select **Select**.
7. When device shows on the display, select **Select** again.

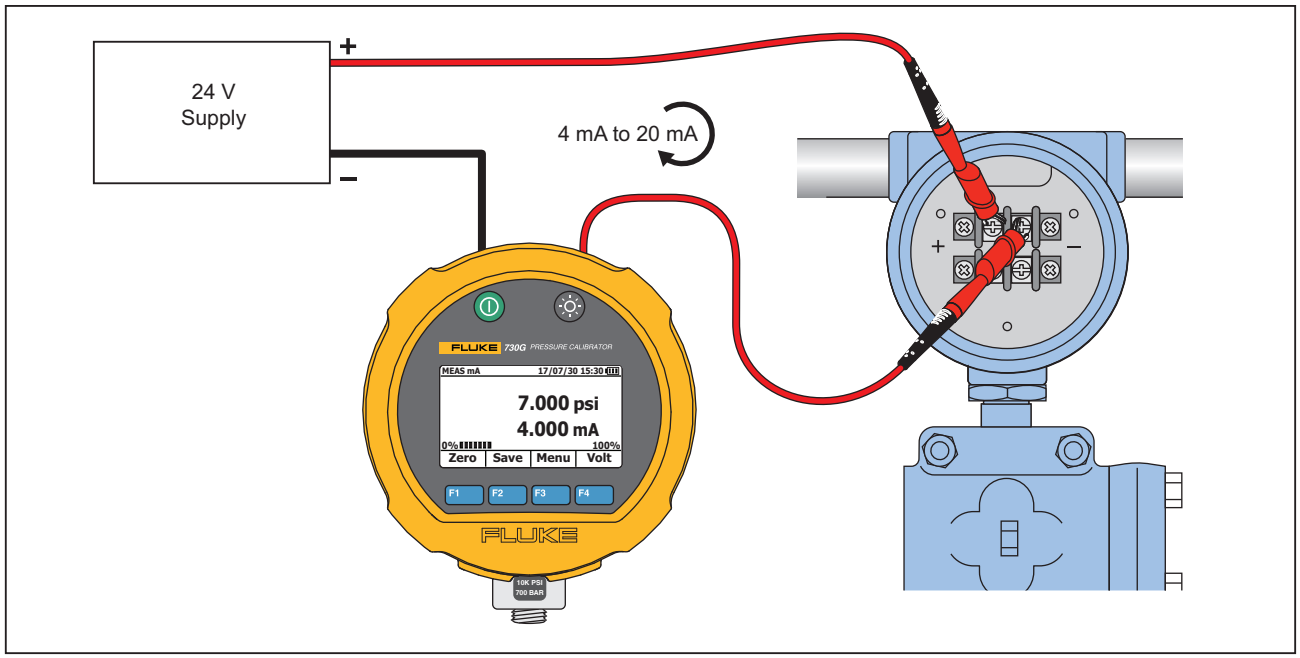

Figure 10. External Loop Power, Internal Resistance

External Loop Power, External Resistance

To use the Product across a circuit with an external 24 V loop power supply and an external 250 Ω resistor.

1. Connect the Product to the HART device. See Figure 11.
2. Select **Menu** > **Measure Mode** > **HART Comm.**.
3. Select **24V Off** to disable internal 24V. When the soft key shows **24V On**, use an external source to supply loop power.
4. Select **R Off** to disable internal resistance. When the soft key shows **R On**, use an external 250 Ω resistance.
5. Select **Poll**.
6. Select **Select**.
7. When device shows on the display, select **Select** again.

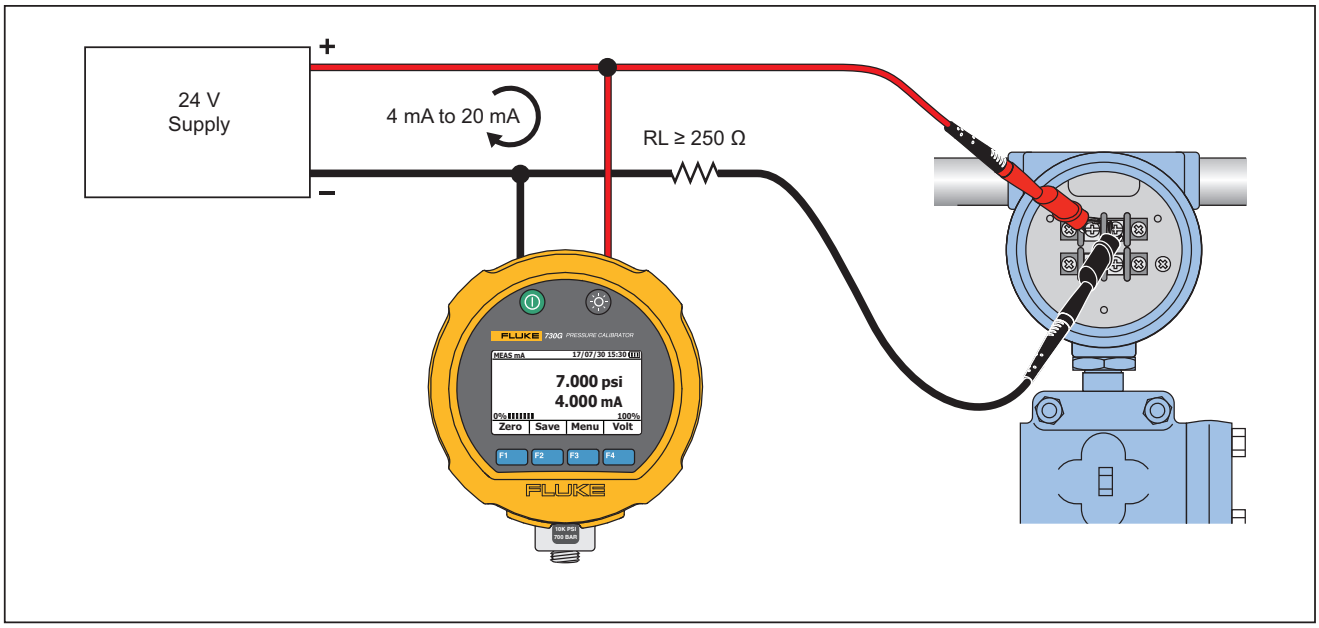

Figure 11. External Loop Power, External Resistance

Data Memory

Use Data Memory to view and delete saved screen shots.

To use the Product to save, review, and delete screen shots:

1. On the home screen, push F2 to take a screen shot of the display.
2. Select **Menu** > **Data Memory**.

   A screen shot shows with x/n in the upper left of the display where x is the screen shot on the display and n is the total number of screen shots saved.
3. Push F2 / F3 to view each of the screen shots.
4. Push F1 to select a screen shot.
5. To delete only the selected screen shot, push F2. To delete all of the saved screen shots, push F3.

Accessories

Table 15 is a list of the accessories available for the Product.

Table 15. Accessories

Description	PN
Rechargeable lithium-ion battery pack	4146702
AC power supply/battery charger	4784233
Test lead set	4306653
Fitting, 1/4 in NPT-Female x M20-Male	4256303
Fitting, 1/4 in NPT-Female x 1/4 in BSP-Male	4256315
Alligator clip red	4239050
Alligator clip black	4239092

Maintenance

The Product needs little maintenance. Clean the case and display. Charge the batteries as needed.

⚠ Caution

To prevent damage to the Product, do not drop the Product. Treat the Product as a calibrated instrument.

Clean the Product

⚠ Caution

To prevent damage to the Product, do not use abrasives, isopropyl alcohol, or solvents to clean the case or display.

Clean the case with a damp cloth and a weak soap solution. To clean the display, use a pressurized can of air or a dry nitrogen-ion gun, if available, to blow off the particulates from the display.

Charge the Battery

Before you use the Product for the first time, charge the battery for at least 2.5 hours. See Figure 12.

Note

New batteries are not fully charged. Make sure that the Product is near room temperature before you connect the Product to the charger. See the charging temperature specification.

Note

Do not charge in hot or cold areas. When you charge in extreme temperatures, battery capacity may decrease.

To charge the battery:

1. Connect the ac power supply end of the ac power supply/battery charger into an ac wall outlet.
2. Connect the battery charger end of the ac power supply/battery charger into the battery charger input on the Product.

   The battery status on the display animates while the battery charges.
3. Charge the Product until the battery status shows . If needed, turn on the Product to see the battery status.
4. Disconnect the ac power supply/battery charger when the battery is fully charged.

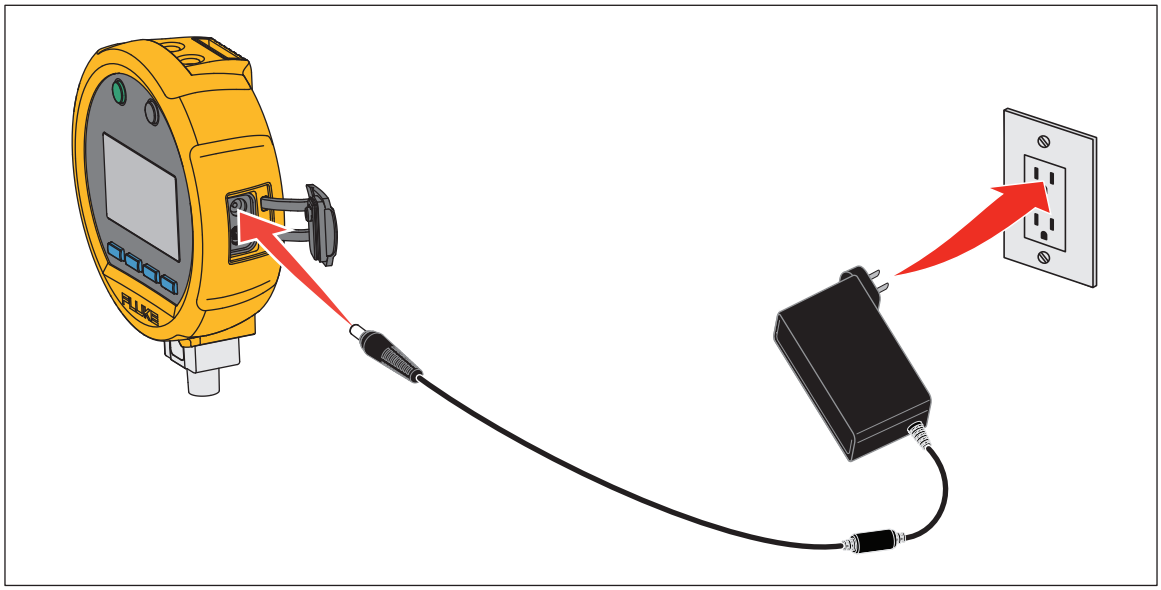

Figure 12. Charge the Battery

Replace the Battery

To replace the battery (See Figure 13):

1. Remove the holster.
2. Use a Phillips screwdriver to loosen the captive screw on the battery door.
3. Remove and replace the battery.
4. Replace the battery door.
5. Replace the holster.

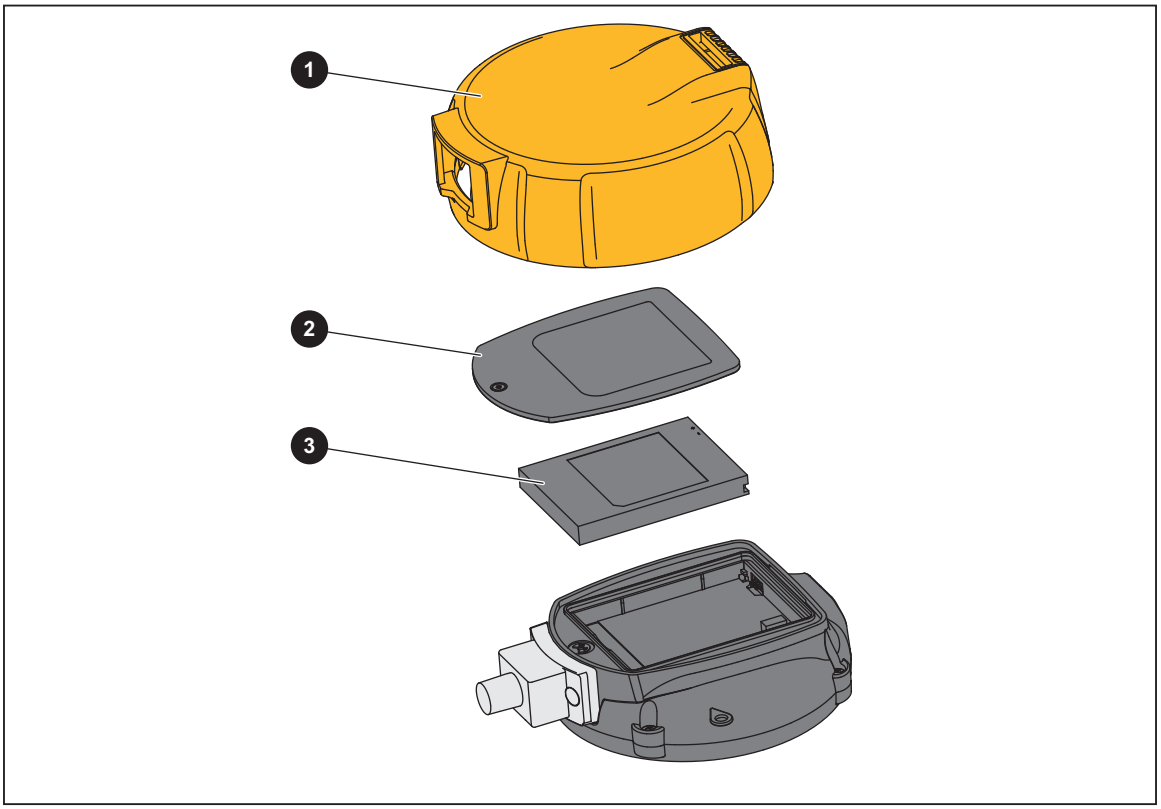

Figure 13. Replace the Battery

Specifications

Accuracy Specifications

Available Input Ranges ..... See *Ranges and Resolutions*.

Accuracy 730G Ranges

Positive Pressure (730G01, 730G02)..... ±0.2 % Full Scale

Positive Pressure (all other ranges)..... ±0.05 % Full Scale

Vacuum (730G01, 730G02)..... ±0.2 % Full Scale

Vacuum (all other ranges) ..... ±0.1 % Full Scale

Temperature Compensation ..... 15 °C to 35 °C to rated accuracy

Note

For 730G01, 730G02, temperatures from 0 °C to 15 °C and 35 °C to 50 °C, accuracy is ±0.3 % Full Scale. For all other models, temperatures from -10 °C to 15 °C and 35 °C to 55 °C, add 0.003 % FS / °C.

Accuracy 730GA Ranges

Positive Pressure..... ±0.05 % Full Scale

Vacuum..... ±0.05 % Full Scale

Temperature Compensation ..... 15 °C to 35 °C to rated accuracy

Note

For 730GA4, temperatures from -10 °C to 15 °C and 35 °C to 55 °C, add 0.006 % FS / °C. For all other models, temperatures from -10 °C to 15 °C and 35 °C to 55 °C, add 0.003 % FS / °C.

Accuracy 730RG Ranges

Positive Pressure ..... ±0.02 % Full Scale
Vacuum ..... ±0.05 % Full Scale
Temperature Compensation ..... 18 °C to 28 °C to rated accuracy

Note

For temperatures from 0 °C to 18 °C and 28 °C to 50 °C, add 0.003 % FS / °C.

Media Compatibility

730G01, 730G02, 730G04,
730G05, 730RG04, 730RG05 ..... any clean, dry, non-corrosive gas
All other ranges ≥100 psi ..... any liquids or gases compatible with 316 stainless steel

Mechanical Specifications

Dimensions ..... 155 mm x 130 mm x 44 mm
Weight ..... 850 g

Electrical Specifications

All Specifications are valid to 110 % of range.

Ranges

mA ..... 0 mA to 24 mA
Volts ..... 0 V dc to 30 V dc

Resolution

mA Range ..... 1 µA
Voltage Range ..... 1 mV
Accuracy ..... 0.01 % ±2 LSD all ranges at 23 °C ±5 °C
Temperature Compensation ..... 20 ppm FS / °C from -10 °C to 18 °C and 28 °C to 50 °C
Loop Compliance Voltage ..... 24 V dc at 20 mA
Temperature Measurement Accuracy
Inside the Product ..... ±0.5 °C
Drive Capability
With internal HART resistor ..... 950 Ω
Without HART resistor ..... 1200 Ω

Environmental Specifications

Power

Battery ..... BP1730-2009, Lithium-ion rechargeable battery pack 3.7 V, 2.5 Ah, 9.25 Wh
Battery Life
Without 24 V Loop Power ..... 25 hours
Continuous ..... 8 hours
Battery Charge Temperature ..... 0 °C to 45 °C
Power Adapter
Input ..... 100 V to 240 V, 50 Hz to 60 Hz,
0.6 A to 0.8 A
Output ..... 15 V dc, 2 A

Temperature

Operating
With Battery ..... As specified by the manufacturer of the battery
Without Battery
730G01, 730G02, 730G04,
730G05, all 730RG ..... 0 °C to 50 °C
All other 730G, 730GA ..... -10 °C to 55 °C

Storage

With battery ..... -20 °C to 50 °C

Without battery

730G01, 730G02, 730G04,

730G05, all 730RG..... -20 °C to 70 °C

All other 730G, 730GA ..... -40 °C to 70 °C

Relative Humidity..... <+10 °C, non condensing
≤90 % RH (10 °C to 30 °C)
≤75 % RH (30 °C to 40 °C)
≤45 % RH (40 °C to 50 °C)

Altitude

Operating ..... 2000 m

Storage ..... 12 000 m

Safety

General..... IEC 61010-1: Pollution Degree 2, IEC 61010-2-030: 30 V max

Lithium Battery..... IEC 62133, UN 38.3; 3.7 V, 2.5 Ah, 9.25 Wh

Ingress Protection Rating ..... IEC 60529: IP54 (with all port seals properly fitted)

Electromagnetic Compatibility (EMC)

International ..... IEC 61326-1: Basic Electromagnetic Environment;
CISPR 11: Group 1, Class A

Group 1: Equipment has intentionally generated and/or uses conductively-coupled radio frequency energy that is necessary for the internal function of the equipment itself.

Class A: Equipment is suitable for use in all establishments other than domestic and those directly connected to a low-voltage power supply network that supplies buildings used for domestic purposes. There may be potential difficulties in ensuring electromagnetic compatibility in other environments due to conducted and radiated disturbances.

Caution: This equipment is not intended for use in residential environments and may not provide adequate protection to radio reception in such environments.

Korea (KCC) ..... Class A Equipment (Industrial Broadcasting & Communication Equipment)

Class A: Equipment meets requirements for industrial electromagnetic wave equipment and the seller or user should take notice of it. This equipment is intended for use in business environments and not to be used in homes.

Ranges and Resolutions

Model	Sensor	Range	Resolution	Burst Pressure
730G01	NPH-8-002.5DH	-10 inH_20 to 10 inH_20 -20 mbar to 20 mbar	0.001 inH_20 0.001 mbar	3 psi 210 mbar
730G02	NPH-8-007DH	-1 psi to 1 psi -70 mbar to 70 mbar	0.0001 psi 0.001 mbar	5 psi 350 mbar
730G04	27-030G	-14 psi to 15 psi -0.97 bar to 1 bar	0.001 psi 0.0001 bar	60 psi 4 bar
730G05	27-030G	-14 psi to 30 psi -0.97 bar to 2 bar	0.001 psi 0.0001 bar	120 psi 8 bar
730G06	85-100G-4R	-12 psi to 100 psi -0.83 bar to 6.9 bar	0.01 psi 0.0001 bar	400 psi 26 bar
730G27	85-500G-4R	-12 psi to 300 psi -0.83 bar to 20 bar	0.01 psi 0.001 bar	1200 psi 80 bar
730G07	85-500G-4R	-12 psi to 500 psi -0.83 bar to 34 bar	0.01 psi 0.001 bar	2000 psi 138 bar
730G08	87N-1000S-4R	-14 psi to 1000 psi -0.97 bar to 69 bar	0.1 psi 0.001 bar	4000 psi 266 bar
730G10	87N-3000A-4R	-14 psi to 2000 psi -0.97 bar to 140 bar	0.1 psi 0.01 bar	8000 psi 550 bar
730G29	87N-3000A-4R	-14 psi to 3000 psi -0.97 bar to 200 bar	0.1 psi 0.01 bar	10000 psi 690 bar
730G30	87N-5000A-4R	-14 psi to 5000 psi -0.97 bar to 340 bar	0.1 psi 0.01 bar	10000 psi 690 bar
730G31	87N-10KS-4R	-14 psi to 10000 psi -0.97 bar to 690 bar	1 psi 0.01 bar	15000 psi 1035 bar
730GA4	85-015A-4R	0 psia to 15 psia 0 bar absolute to 1 bar absolute	0.001 psi 0.0001 bar	60 psi 4 bar
730GA5	85-030A-4R	0 psia to 30 psia 0 bar absolute to 2 bar absolute	0.001 psi 0.0001 bar	120 psi 8 bar
730GA6	85-100A-4R	0 psia to 100 psia 0 bar absolute to 6.9 bar absolute	0.01 psi 0.0001 bar	400 psi 26 bar
730GA27	85-300A-4R	0 psia to 300 psia 0 bar absolute to 20 bar absolute	0.01 psi 0.001 bar	1200 psi 80 bar
730RG04	NPH-8-100DH	-14 psi to 15 psi -0.97 bar to 1 bar	0.001 psi 0.0001 bar	45 psi 3 bar
730RG05	27-030G	-14 psi to 30 psi -0.97 bar to 2 bar	0.001 psi 0.0001 bar	90 psi 6 bar
730RG06	85-100G-4R	-12 psi to 100 psi -0.83 bar to 6.9 bar	0.01 psi 0.0001 bar	1000 psi 69 bar
730RG27	85-300G-4R	-12 psi to 300 psi -80 kPa to 2 MPa	0.01 psi 0.001 bar	2000 psi 14 MPa
730RG07	85-500G-4R	-12 psi to 500 psi -80 kPa to 3.5 MPa	0.01 psi 0.001 bar	2000 psi 138 bar
730RG08	87N-1000S-4R	-14 psi to 1000 psi -0.97 bar to 69 bar	0.01 psi 0.001 bar	10000 psi 690 bar
730RG29	87N-03KS-4R-A1995	-14 psi to 3000 psi -0.97 bar to 200 bar	0.1 psi 0.01 bar	10000 psi 690 bar
730RG30	87N-05KS-4R-A1995	-14 psi to 5000 psi -0.97 bar to 340 bar	0.1 psi 0.01 bar	10000 psi 690 bar
730RG31	87N-10KS-4R-A1995	-14 psi to 10000 psi -0.97 bar to 690 bar	0.1 psi 0.01 bar	15000 psi 1035 bar