QRG

FLUKE

802EN
Vibration Meter

⚠ 📖 www.fluke.com

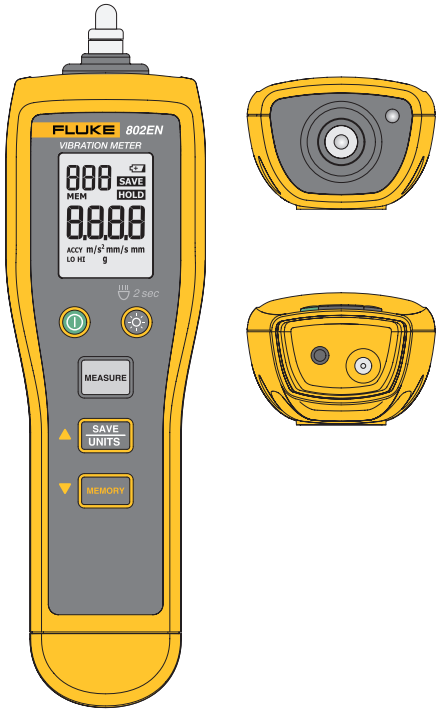

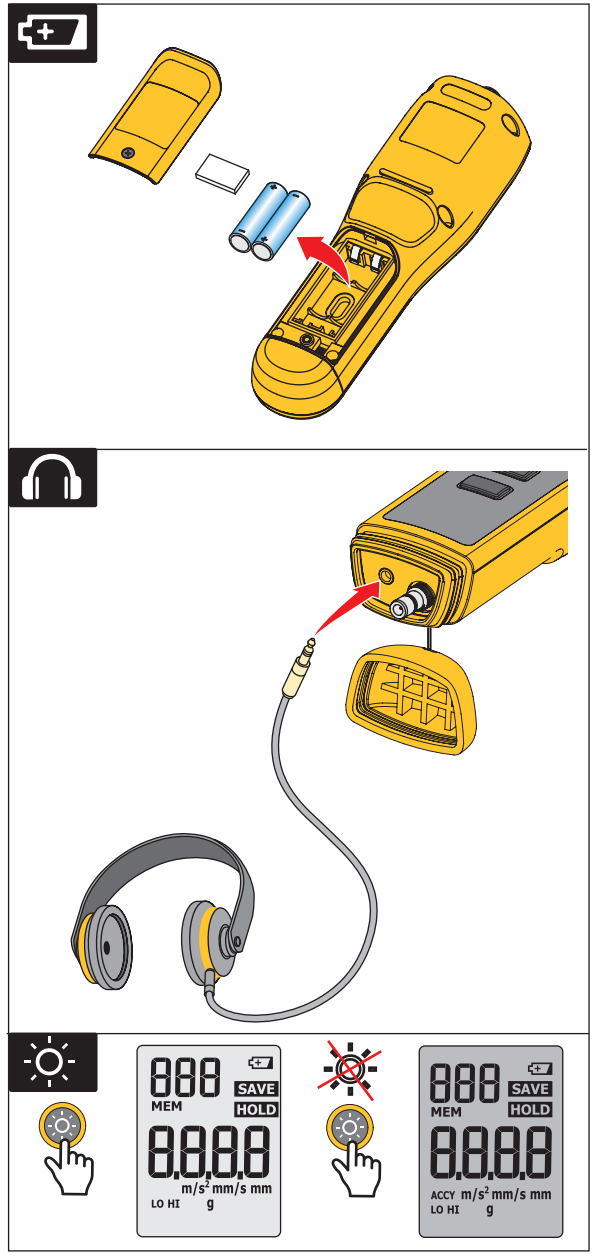

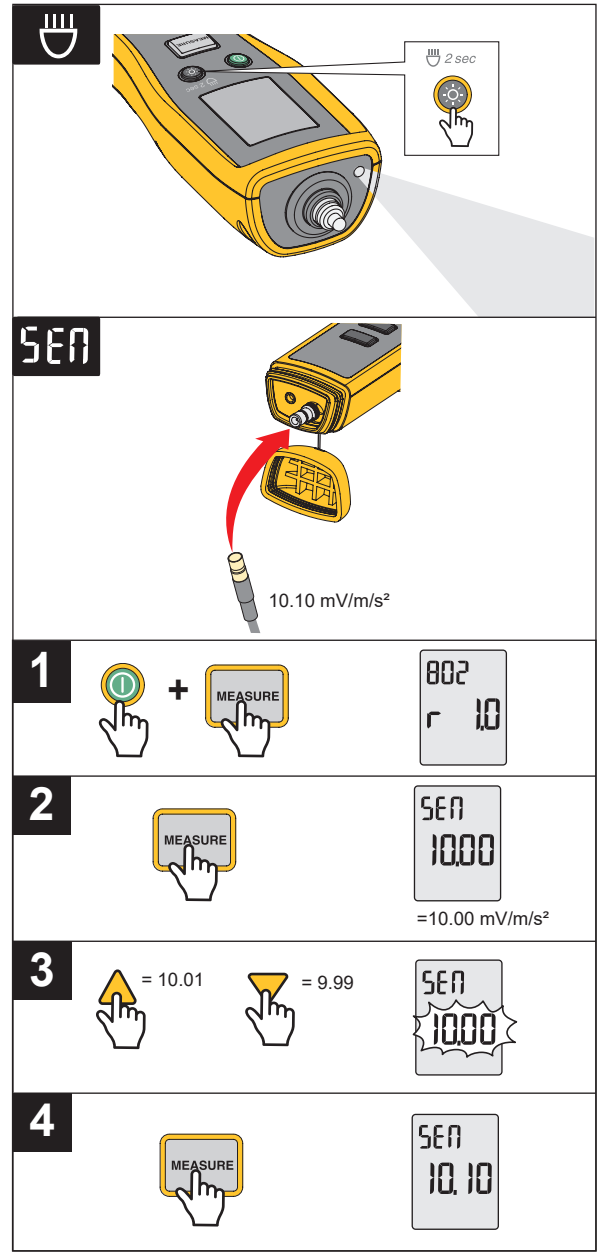

PN 5346665 June, 2022
©2022 Fluke Corporation. All Rights Reserved

MEASURE

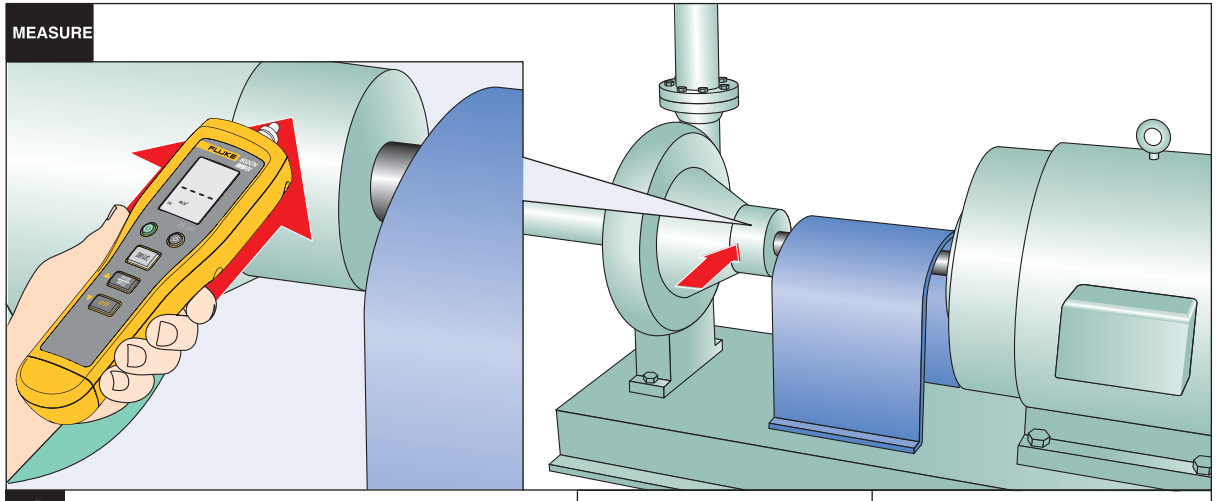

1





LO m/s²
HI m/s²
mm/s
mm



>3 s

LO g
HI g

2





>6 s



MEM

1





2















>5 s



SAVE









Machine	Class I	Class II	Class III	Class IV
mm/s	Small Machines	Medium Machines	Large Rigid Foundation	Large Soft Foundation
0.28				
0.45				
0.71		GOOD		
1.12				
1.80				
2.80		SATISFACTORY		
4.50				
7.10		UNSATISFACTORY		
11.20				
18.00				
28.00		UNACCEPTABLE		
45.90				

Vibration Velocity Vrms