FLUKE®

# 810
Vibration Tester

## Getting Started

PN 3464986
January 2010
© 2010 Fluke Corporation. All rights reserved. Printed in USA. Specifications are subject to change without notice.
All product names are trademarks of their respective companies.

**LIMITED WARRANTY AND LIMITATION OF LIABILITY**

Your Fluke Vibration Tester is warranted to be free from defects in material and workmanship under normal use and service for three years from the date of shipment to you. The same warranty applies to the Tachometer and the Sensor but for one year from the date of shipment. Parts, product repairs, and services are warranted for 90 days. This warranty extends only to the original buyer or end-user customer of a Fluke authorized reseller, and does not apply to fuses, disposable batteries, or to any product which, in Fluke's opinion, has been misused, altered, neglected, contaminated, or damaged by accident or abnormal conditions of operation or handling. Fluke warrants that software will operate substantially in accordance with its functional specifications for 90 days and that it has been properly recorded on non-defective media. Fluke does not warrant that software will be error free or operate without interruption.

Fluke authorized resellers shall extend this warranty on new and unused products to end-user customers only but have no authority to extend a greater or different warranty on behalf of Fluke. Warranty support is available only if product is purchased through a Fluke authorized sales outlet or Buyer has paid the applicable international price. Fluke reserves the right to invoice Buyer for importation costs of repair/replacement parts when product purchased in one country is submitted for repair in another country.

Fluke's warranty obligation is limited, at Fluke's option, to refund of the purchase price, free of charge repair, or replacement of a defective product which is returned to a Fluke authorized service center within the warranty period.

To obtain warranty service, contact your nearest Fluke authorized service center to obtain return authorization information, then send the product to that service center, with a description of the difficulty, postage and insurance prepaid (FOB Destination). Fluke assumes no risk for damage in transit. Following warranty repair, the product will be returned to Buyer, transportation prepaid (FOB Destination). If Fluke determines that failure was caused by neglect, misuse, contamination, alteration, accident, or abnormal condition of operation or handling, including overvoltage failures caused by use outside the product's specified rating, or normal wear and tear of mechanical components, Fluke will provide an estimate of repair costs and obtain authorization before commencing the work. Following repair, the product will be returned to the Buyer transportation prepaid and the Buyer will be billed for the repair and return transportation charges (FOB Shipping Point).

THIS WARRANTY IS BUYER'S SOLE AND EXCLUSIVE REMEDY AND IS IN LIEU OF ALL OTHER WARRANTIES, EXPRESS OR IMPLIED, INCLUDING BUT NOT LIMITED TO ANY IMPLIED WARRANTY OF MERCHANTABILITY OR FITNESS FOR A PARTICULAR PURPOSE. FLUKE SHALL NOT BE LIABLE FOR ANY SPECIAL, INDIRECT, INCIDENTAL OR CONSEQUENTIAL DAMAGES OR LOSSES, INCLUDING LOSS OF DATA, ARISING FROM ANY CAUSE OR THEORY.

Since some countries or states do not allow limitation of the term of an implied warranty, or exclusion or limitation of incidental or consequential damages, the limitations and exclusions of this warranty may not apply to every buyer. If any provision of this Warranty is held invalid or unenforceable by a court or other decision-maker of competent jurisdiction, such holding will not affect the validity or enforceability of any other provision.

Fluke Corporation
P.O. Box 9090
Everett, WA 98206-9090
U.S.A.

Fluke Europe B.V.
P.O. Box 1186
5602 BD Eindhoven
The Netherlands

# *Table of Contents*


| Title | Page |
|---|---|
| Introduction | 1 |
| How to Contact Fluke | 1 |
| Features | 2 |
| Safety | 2 |
| Rotating Equipment | 3 |
| Tachometer | 3 |
| Heat Sink | 3 |
| Symbols | 4 |
| Unpack and Inspect | 4 |
| Storage | 6 |
| Battery | 6 |
| Accessories | 8 |
| Navigation and User Interface | 8 |
| How to Use the Dial | 9 |
| How to Use the Function Softkeys | 9 |

Accessory Connectors ..... 10
Start the Tester ..... 11
Sensor Setup ..... 12
  Compatible Sensors ..... 12
  How to Connect the Fluke Sensor ..... 12
  Sensor Care and Handling ..... 13
Tachometer Setup ..... 13
  How to Measure RPM with the Tachometer ..... 14
  Laser Safety Precautions ..... 15
How to Access Help ..... 15
Instrument Setup ..... 16
  Self Test ..... 16
  Settings ..... 17
  Clear Memory ..... 19
Viewer Software ..... 19
  System Requirements ..... 20
  PC Connections ..... 20

# List of Tables


| Table | Title | Page |
|---|---|---|
| 1. | Symbols | 4 |
| 2. | Accessories | 8 |
| 3. | Front Panel | 9 |
| 4. | Navigation Softkey Functions | 10 |
| 5. | Accessory Connectors | 11 |
| 6. | Tester Settings | 18 |


# List of Figures


| Figure | Title | Page |
|---|---|---|
| 1. | Items Included with the Tester | 5 |
| 2. | How to Charge the Battery | 7 |
| 3. | Front Panel | 8 |
| 4. | Accessory Connectors | 10 |
| 5. | Sensor Setup and Connection | 13 |
| 6. | Tachometer Setup and Connection | 14 |
| 7. | Tester to PC Connections | 21 |

## Introduction

The Fluke 810 Vibration Tester with diagnostic technology (the Tester) helps you quickly identify and prioritize mechanical problems. With the Tester, you can make decisions about mechanical maintenance and use it as a supplement to your own judgment based on machine knowledge. The expertise of a trained vibration analyst is in your hands.

The Fluke 810 uses a simple step-by-step process to report on machine faults the first time measurements are taken without prior measurement history. The diagnostic technology analyzes your machinery and provides text-based diagnoses, severity levels and possible repair recommendations. Faults are identified by comparing vibration data gathered by the Fluke 810 to an extensive set of rules gathered over years of field experience.

Primarily used for troubleshooting problem equipment, the Tester can also be used to survey equipment before or after planned maintenance. The combination of diagnoses, severity and possible repair recommendations help you make more informed maintenance decisions and address critical problems first.

**⚠⚠ Warning**

**Read "Safety Information" before using this Tester.**

## How to Contact Fluke

To contact Fluke, call one of the following telephone numbers:

- Technical Support USA: 1-800-44-FLUKE (1-800-443-5853)
- Calibration/Repair USA: 1-888-99-FLUKE (1-888-993-5853)
- Canada: 1-800-36-FLUKE (1-800-363-5853)
- Europe: +31 402-675-200
- Japan: +81-3-3434-0181
- Singapore: +65-738-5655
- Anywhere in the world: +1-425-446-5500

Or, visit Fluke's website at www.fluke.com.

To register your product, visit http://register.fluke.com.

To view, print, or download the latest manual supplement, visit http://us.fluke.com/usen/support/manuals.

## Features

- On-board diagnosis and location of the four most common standard mechanical faults: bearings, looseness, misalignment, unbalance and other (non-standard faults)
- Fault severity scale with four severity levels: Slight, Moderate, Serious, and Extreme
- Prioritized repair recommendations
- Diagnostic details include cited peaks and vibration spectra
- Context Sensitive Help
- 2 GB expandable on-board memory
- Data export (via USB connection) for more detailed analysis
- Self-test
- Laser tachometer for accurate machine running speed
- 100 mV/g TEDS triaxial accelerometer
- Data storage and tracking with included Viewer Software
- Color LCD display
- Languages: English, French, German, Italian, Portuguese, Spanish, Japanese, Simplified Chinese

## Safety

The Tester complies with:

In this manual, a **Warning** identifies hazardous conditions and actions that could cause bodily harm or death. A **Caution** identifies conditions and actions that could damage the Tester, the equipment under test, or cause permanent loss of data.

**⚠ Warning**

**To avoid personal injury, follow these guidelines for the Tester:**

- **Use only as specified in this manual or the protection provided by the Tester might be impaired.**
- **Do not use if damaged. Before you use the Tester, inspect the case. Look for cracks or missing plastic. Pay particular attention to the insulation surrounding the connectors.**
- **Make sure the battery is securely in place before operation.**
- **Do not operate around explosive gas, vapor, or dust.**
- **Use proper protective equipment, as required by local or national authorities, when working in hazardous areas.**

- **Comply with local and national safety requirements when working in hazardous locations.**

## *Rotating Equipment*

**⚠ Warning**

**To avoid personal injury:**

- **Use caution around rotating equipment.**
- **Keep cords and straps contained.**

## *Tachometer*

**⚠ Warning**

**To avoid personal injury or damage to the Tachometer:**

- **Do not point laser beam directly at eyes.**
- **Do not operate around explosive gas, vapor or dust.**
- **Do not open. The Tachometer does not contain any user-serviceable parts.**
- **When not in use, always place in protective cover.**

## *Heat Sink*

**⚠ Caution**

- **The heat sink may feel warm to the touch, this is normal.**
- **To avoid overheating, do not cover the heat sink while the Tester is on.**

## Symbols

Table 1 lists and describes the symbols used on the Tester and in this manual.

**Table 1. Symbols**

| Symbol | Description |
|---|---|
| ⚠ | Important Information; refer to manual |
| | Battery condition |
| Li-ion | This product contains a Lithium-ion battery. Do not mix with the solid waste stream. Spent batteries should be disposed of by a qualified recycler or hazardous materials handler per local regulations. Contact your authorized Fluke Service Center for recycling information. |
| C US | Conforms to relevant Canadian and US standards |
| N10140 | Conforms to relevant Australian standards |
| CE | Conforms to European Union directives |
| | Warning. Class 2 Laser Product. Laser radiation. Do not stare into beam. |
| | Do not dispose of this product as unsorted municipal waste. Go to Fluke's website for recycling information. |

## Unpack and Inspect

Carefully unpack and inspect all the items in Figure 1. The items that follow are included in your purchase of the Tester:

① Fluke 810 Vibration Tester
② Storage Case
③ Smart Battery Pack
④ Smart Battery Pack Cable and Adapters
⑤ Shoulder Strap
⑥ Tachometer and Pouch
⑦ Sensor
⑧ Sensor Magnet Mount
⑨ Sensor Quick Disconnect Cable
⑩ Sensor Mounting Pads (10-pack)
⑪ Adhesive
⑫ Mini USB to USB Cable
⑬ Getting Started Guide
⑭ Quick Reference Guide
⑮ User Documentation / Viewer Software CD-ROM
⑯ Training DVD

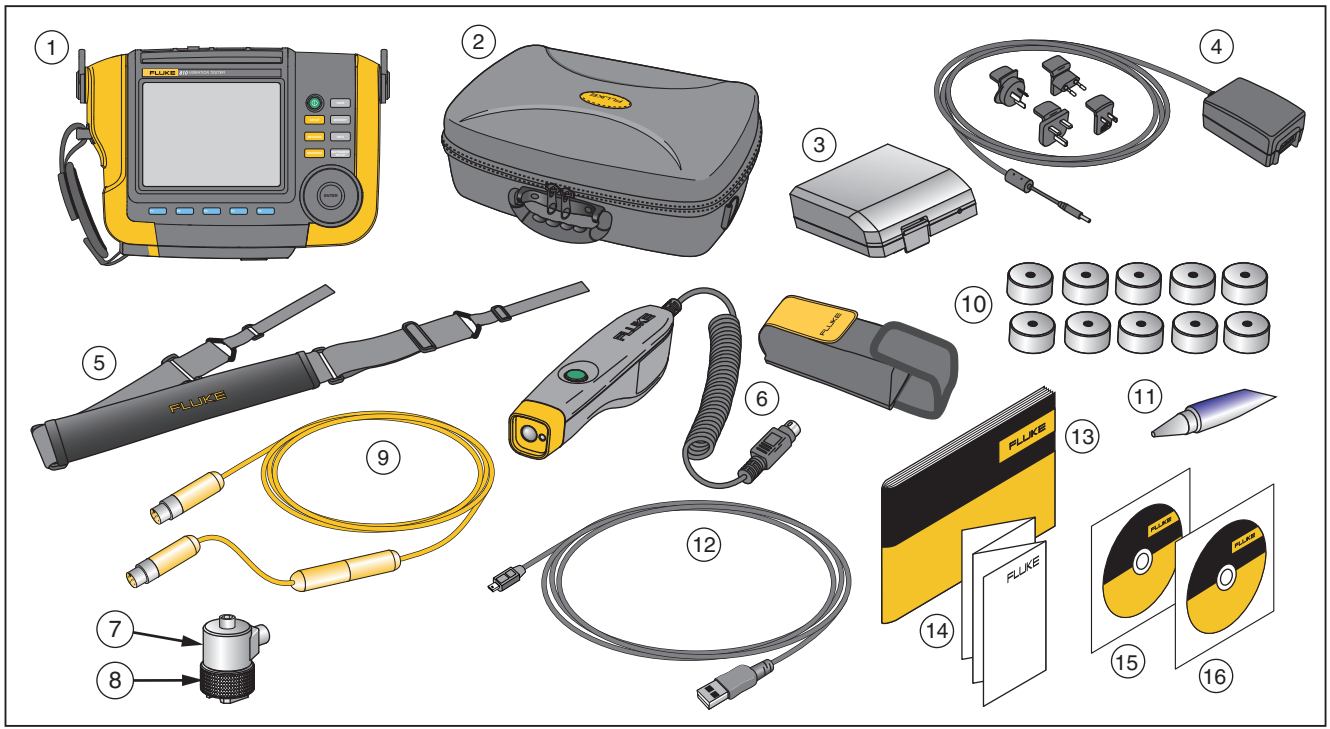


gbk10.eps

**Figure 1. Items Included with the Tester**

## Storage

When not in use, keep the Tester in the protective storage case. The case has sufficient space for the Tester and all accessories.

## Battery

The Tester operates on an internal rechargeable Lithium-ion battery. After you unpack and inspect the Tester, fully charge the battery before the first use. Afterwards, charge the battery when the battery icon on the screen indicates that power is low. To charge the battery with the battery in place on the Tester:

1. Connect the ac adapter to the ac input socket on the Tester.
2. Connect the adapter to a power source.

Or, to charge the battery outside the Tester:

1. Remove the battery from the Tester, see Figure 2.
2. Connect the ac adapter to the ac input socket of the battery.
3. Connect the adapter to a power source.

*Note*

*Three hours are necessary for a full battery charge.*

The color of the battery status LED shows:

**Red** - battery is connected to the power source.

**Green** - battery is connected to the power source and is fully charged.

**⚠ Caution**

**To avoid Tester damage:**

- **Use only the ac adapter that is included with the Tester.**
- **Make sure that the external power source is correctly rated for the Tester.**
- **Do not leave batteries unused for extended periods of time, either in the product or in storage.**
- **When a battery has not been used for six months, check the charge status and charge or dispose of the battery as appropriate.**

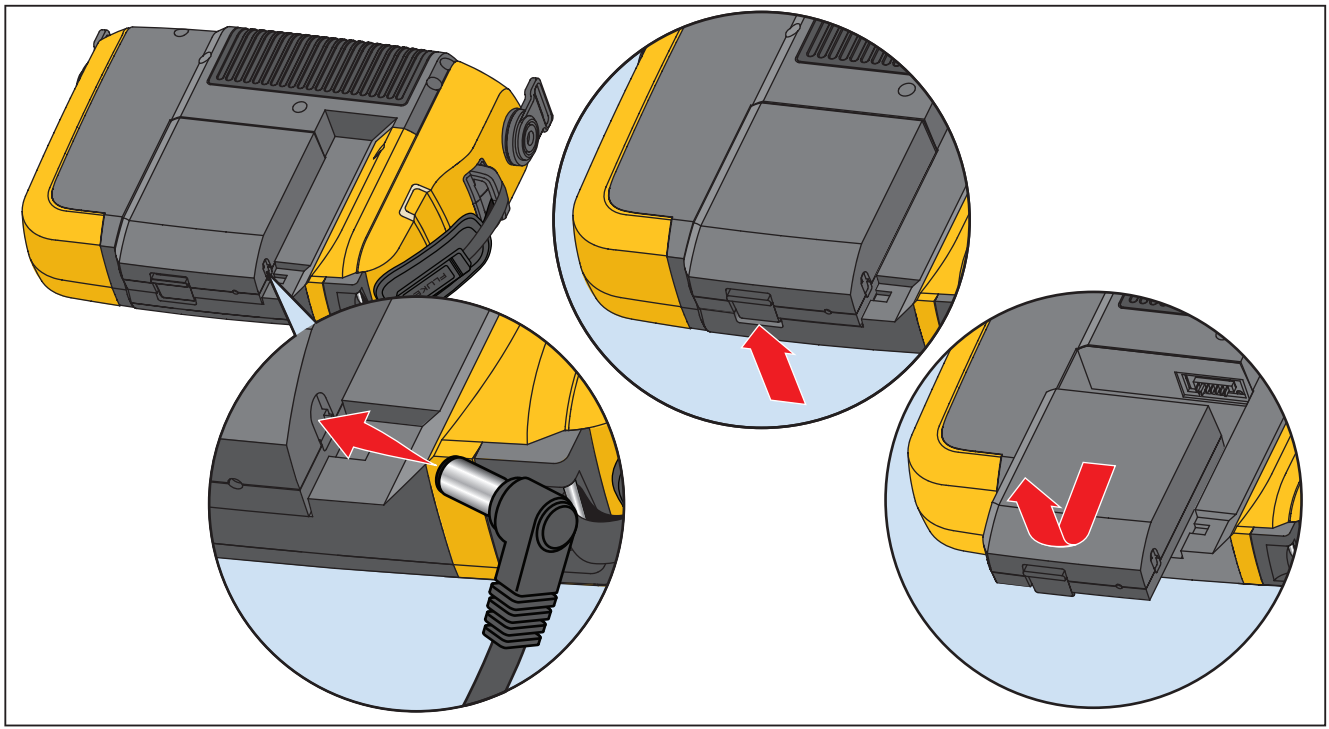

gbk03.eps

**Figure 2. How to Charge the Battery**

## Accessories

Table 2 lists the accessories that are available and sold separately for the Tester.

**Table 2. Accessories**

| Model | Description | Part Number |
|---|---|---|
| 810T | Tachometer | 3530819 |
| 810S | Sensor | 3530828 |
| 810QDC | Quick Disconnect Cable | 3530837 |
| SBP810 | Smart Battery Pack | 3530843 |
| 810SMM | Sensor Magnet Mount | 3530862 |

## Navigation and User Interface

Figure 3 shows the front panel of the Vibration Tester. Table 3 lists the front-panel controls and their functions.




gbk02.eps

**Figure 3. Front Panel**

**Table 3. Front Panel**

| Item | Control | Description |
|---|---|---|
| ① | ⏻ | Turns the Tester on or off. |
| ② | SETUP | Shows the Machine Setup options: Set up new Machine, Copy Machine Setup, Change a Machine Setup |
| ③ | MEASURE | Shows the Machine Setups available for measurement. After the selection of a Machine Setup, continue with the measurement screens. |
| ④ | DIAGNOSE | Shows the completed Machine Setups with measurements that are available for diagnosis. After a measurement, push to see the diagnosis screen. |
| ⑤ | SAVE | Saves the parameters for the Tester settings and Machine Setups. |
| ⑥ | MEMORY | Shows the Machine Setups and diagnoses in Tester memory. |
| ⑦ | INFO | From the Startup screen, shows the Help menu. For other screens, shows Help for the current screen. |
| ⑧ | INSTRUMENT SETUP | Shows the Self Test, Settings, and Clear Memory functions. |
| ⑨ | Dial | Turn the Dial to move the cursor highlight on the screen. Push the center of the Dial (Enter) to make the selection. |
| ⑩ | Softkeys | Softkeys F1 through F5 make the selections that show on the screen above each softkey. |

## How to Use the Dial

The Dial has multiple functions. Turn the Dial clockwise or counterclockwise to move the cursor or highlight. Push the Dial to make a selection.

## How to Use the Function Softkeys

Along the bottom of the display, a row of labels shows the available functions. Push a softkey, F1 through F5, below the display label to start that function.

Table 4 lists the navigation softkeys and their function.

**Table 4. Navigation Softkey Functions**

| Softkey | Function |
|---|---|
| **Previous Page / Next Page** | View the previous/next screen. |
| **ENTER** | Select the highlighted function. Or, push the Dial to select the same function. |
| **Back** | Go to the previous field or screen. |
| **Move Cursor** | Move the cursor one space to the left. |
| **Delete Character** | Delete an entry with the keyboard. |
| **Exit** | Exit from current display. |
| **Save** | Save settings in current display. |
| **Done** | Save keyboard entries. |

Also, you can use the front-panel buttons, along the right side of the Tester, to go directly to a top-level menu.

*Note*

*When the beeper is on, a short beep sounds for a valid button push. A long beep sounds for an invalid button push.*

## Accessory Connectors

Figure 4 shows the connector panel of the Tester. Table 5 is a list of descriptions for each connector on the Tester.

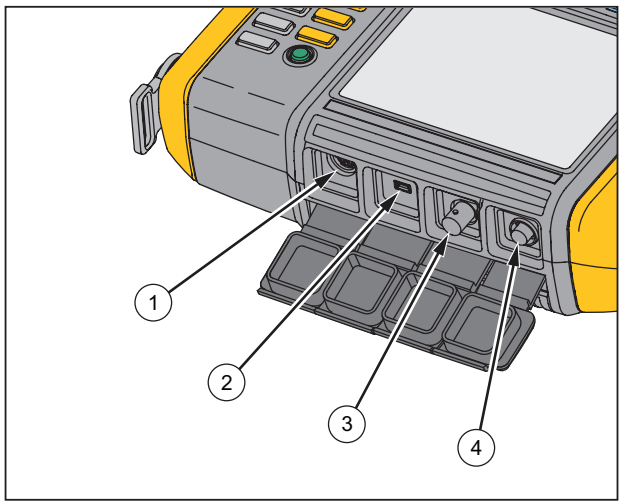


**Figure 4. Accessory Connectors**

**Table 5. Accessory Connectors**

| Item | Connector | Description |
|---|---|---|
| ① | Tachometer | Connects the Tachometer |
| ② | USB | Connects the Tester to the PC using a USB cable |
| ③ | Sensor | Optional connector for single axis Sensor |
| ④ | Sensor | Connects the triaxial Sensor |

## Start the Tester

*Note*

- *Before using the Tester for the first time, charge the battery for at least three hours. For charging procedure, see "Battery."*
- *Before using the Tester, make sure that there is sufficient battery charge and free memory.*

Push ⏻ to turn on the Tester. At power up, the Tester displays the remaining memory and the battery status.

The battery status icon and the set date and time appear at the top of the display.

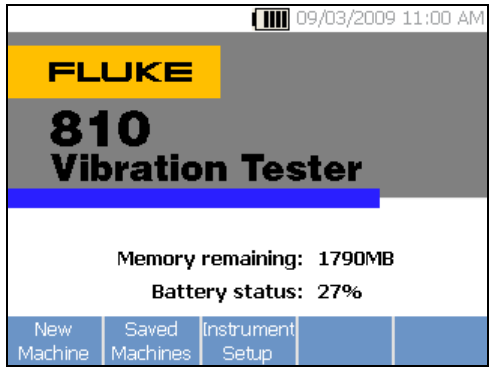


gbk21.bmp

*Note*

*The first time you turn the Tester on, it displays the Settings screen. It is important to enter the correct information into the setup fields before you start a test, especially the power line frequency. For more information, see "Instrument Setup" section.*

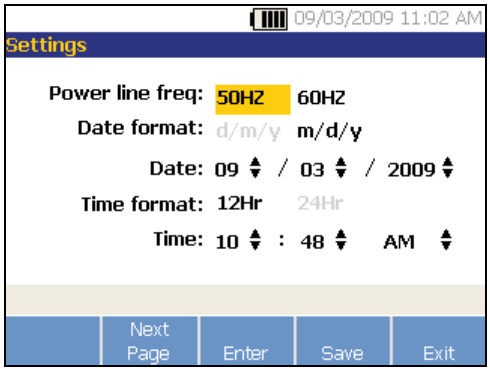


gbk40.bmp

## Sensor Setup

The Tester includes a triaxial Sensor with TEDS technology (Transducer Electronic Data Sheets). With this technology, your Tester can identify and automatically configure the Sensor. This technology provides:

- Improved results from detailed calibration information
- Reduced configuration time without manual data entry
- Better Sensor tracking with data sheets stored electronically

## Compatible Sensors

It is highly recommended to use a triaxial Sensor with the Tester. Using a Sensor other than a Fluke triaxial Sensor will result in misleading diagnoses. The Tester is compatible with single axis Sensors.

**⚠ Caution**

**Non-Fluke triaxial Sensors are not compatible with the Tester.**

## How to Connect the Fluke Sensor

To connect and set up a triaxial Sensor:

1. Attach the cable to the Sensor and tighten the threaded cable sleeve. See Figure 5.
2. Connect the cable to the Tester and tighten the threaded cable sleeve.

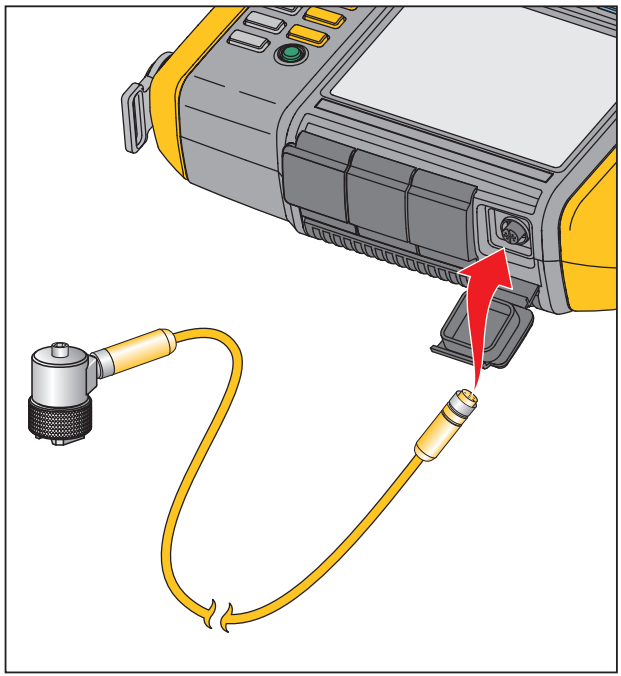
gbk07.eps

**Figure 5. Sensor Setup and Connection**

## Sensor Care and Handling

**⚠ Caution**

- **To prevent damage to the piezoelectric element inside the Sensor, do not drop. A faulty Sensor significantly affects the diagnostic quality.**
- **Do not pull or force the cable while attaching or removing the Sensor.**
- **Allow the Sensor 10 seconds to warm-up before data collection.**
- **Make sure that all cables are free from any rotating parts of the machine.**
- **Always place the Sensor in the softcase pouch when not in use.**

## Tachometer Setup

During the Machine Setup procedure, you have to enter the speed/RPM (revolutions/minute) of the rotating machine under test. If the RPM is unknown, you can use the non-contact type laser Tachometer to measure the RPM.

*Note*

*Fluke recommends the use of a Tachometer for variable-frequency drives (VFD) to determine the running speed under varying load conditions.*

## How to Measure RPM with the Tachometer

To make a Tachometer measurement:

1. Attach the Tachometer to the 6-pin DIN connector on the Tester. See Figure 6.
2. Stop the rotating machine.
3. Attach a piece of reflective tape onto the shaft or other rotating part of the machine.
4. Restart the machine and wait until it reaches its normal operating conditions.
5. Aim the laser beam towards the attached reflective tape.
6. Hold the Tachometer firmly and steady.
7. When the RPM entry screen appears on the display, the power button on the Tachometer lights to indicate that the Tester is ready for RPM measurement.
8. Push and hold the trigger button of the Tachometer to start measuring.
9. Hold the trigger button until the RPM value settles and displays on the Tester.
10. Release the power button to stop measurement.
11. Wait for the short beep that verifies the RPM value has been acquired.

    The Tester automatically turns off the Tachometer.

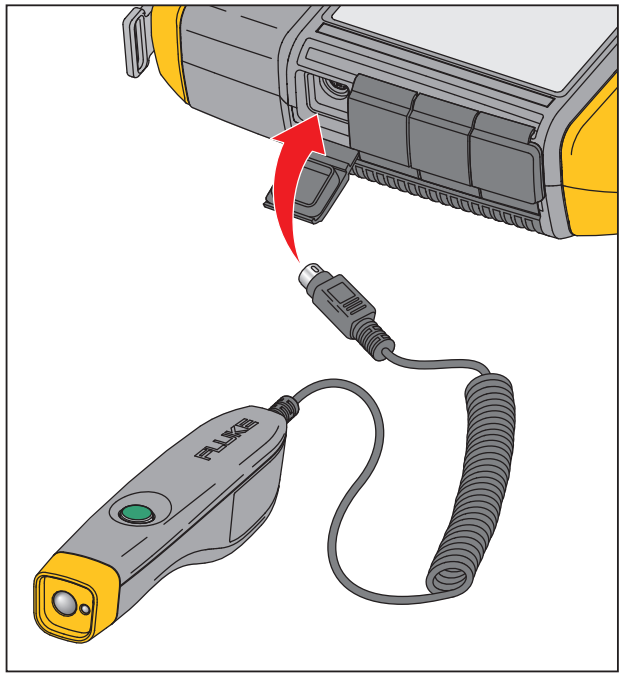


gbk06.eps

**Figure 6. Tachometer Setup and Connection**

## _Laser Safety Precautions_

**⚠⚠ Warning**

- **The Tachometer contains a Class 2 laser pointer.**
- **To avoid eye damage, do not point laser directly at eye or indirectly off reflective surfaces.**
- **Use, other than those specified here, may result in hazardous laser radiation exposure.**
- **Do not use Tachometer in a manner not specified in this document or the protection provided by the equipment may be impaired.**
- **Do not aim the laser beam at people or animals.**

**⚠ Caution**

- **Keep the Tachometer out of the reach of children.**
- **Do not open the Tachometer. The Tachometer has no user serviceable parts.**
- **When not in use, always place the Tachometer in its protective cover.**

## _How to Access Help_

The Tester has context sensitive Help. With the Help feature you can quickly find additional information while you set up the Tester and make measurements. The Help content that shows depends on the current task selection. Push **INFO** at anytime to view specific Help for the current task. The Help for the Tester includes pages for frequently asked questions (FAQ), a glossary, and troubleshooting.

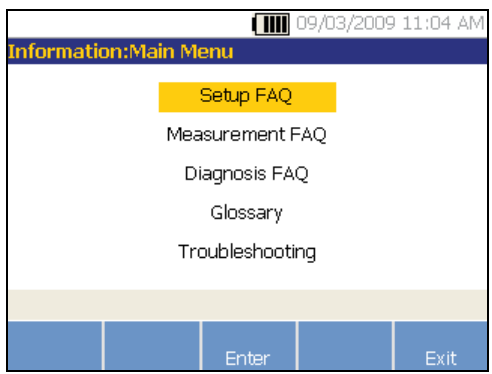


gbk23.bmp

## Instrument Setup

Push INSTRUMENT SETUP or the **Instrument Setup** softkey to display the Self test, Settings, and Clear memory options.

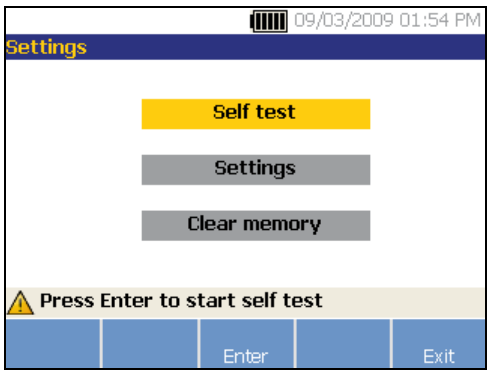


gbk25.bmp

Use the Dial to highlight an option. Push the Dial or **Enter (F3)** softkey to select that option.

## Self Test

The **Self test** option tests the internal modules of the Tester. When you select the **Self test** option, the Tester runs a test module and then displays the self test results as pass or fail.

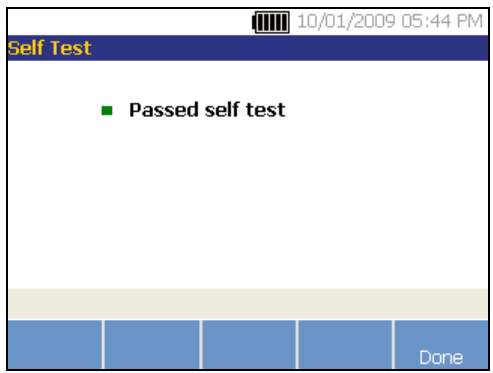


gbk26.bmp

Push the **Done** softkey to go back to Instrument Setup.

*Note*

*If the self-test fails, contact Fluke Service.*

## Settings

To edit the Tester settings in Table 6, select the **Settings** option. Three pages of settings are available.

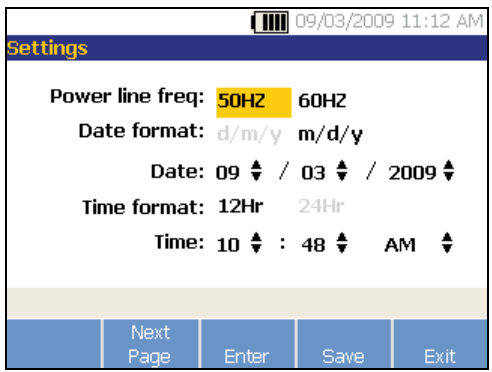


gbk28.bmp

*Note*

*Before you take a measurement, make sure the power line frequency is set correctly.*

Push the **Next Page** softkey to move down the screen and edit the additional settings for the beeper, backlight, power save, time waveform capture, and measurement units.

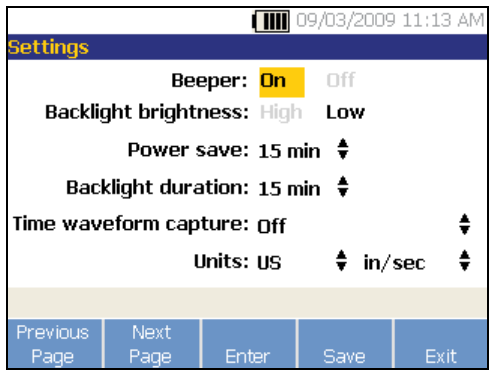


gbk29.bmp

Push the **Next Page** softkey to move down the screen and edit the additional settings. The last screen also displays the Tester's serial number, software version, Sensor calibration due date, and Memory remaining.

**Table 6. Tester Settings**

| Option | Description |
|---|---|
| Power line freq | Set the ac power line frequency to **60Hz** or **50Hz.** The diagnostic quality of a test depends on the correct selection of the ac power line frequency. |
| Date format | Set the Date format as **d/m/y** or **m/d/y** |
| Date | Scroll and set the **Day**, **Month**, and **Year** fields |
| Time format | Set the Time format as **12Hr** or **24Hr** |
| Time | Scroll and set the **Hour**, **Minute**, and **AM** or **PM** fields |
| Beeper | Set the Beeper as **ON** or **OFF** |
| Backlight brightness | Set the display brightness as **High** or **Low** |
| Power save | Scroll and select to set the delay time for the Sleep Mode. If no key is pushed during the set time, the Tester goes into the sleep mode to save battery power. Any key push cancels the sleep mode and resumes normal operation. |
| Backlight duration | Scroll and select to set the delay time for the display backlight. If no key is pushed during the set time, the backlight turns off to save battery power. The backlight turns on when any key is pushed. |
| Time waveform capture | Scroll and select the number of measurements where the time waveform is to be captured. The Tester captures and stores the time waveform data for the selected number of measurements.<br>*Note*<br>*Capture and review of time waveform data is useful in advanced vibration analysis, but keep in mind that data capture uses a significant amount of memory. Captured time waveforms can only be viewed in the Viewer Software, not the Tester.* |
| Units | Scroll and select a unit of measurement as US or metric. Also select the units for the vibration amplitude. VdB and in/sec for US. VdB* indicates VdB Europe and mm/sec for Metric. |

### *Clear Memory*

Select the **Clear Memory** option on the Instrument Setup screen to erase all measurement and diagnosis data. A sequence of confirmation messages display:

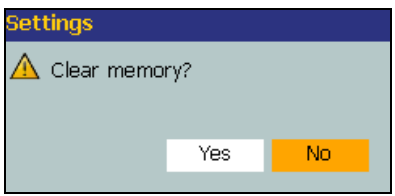


gbk31.bmp

If you select **Yes,** another confirmation message displays:

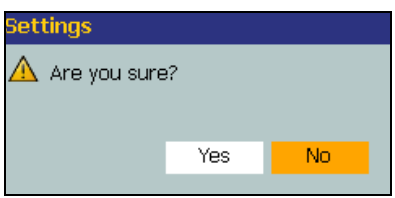


gbk32.bmp

Select **Yes** to clear the memory. This action erases all stored measurement and diagnosis data.

## *Viewer Software*

The 810 Vibration Tester includes Viewer software that lets you do tasks from a computer. With the basic features of the software you can:

- download a Machine Setup from the Tester
- set up a new machine
- make a copy of a Machine Setup
- change a Machine Setup
- look at cited peaks graphs, vibration spectra, and time waveforms
- zoom-in and zoom-out of data views
- make a backup of the diagnosis data from a measured machine
- import and look at the thermographic image of a machine

Additionally, you can configure the Machine Setups with the software and upload them to the Tester. This Machine Setup procedure is much the same as the Machine Setup wizard in the Tester. For external analysis of the fault data, you can export the Machine Setup, diagnosis data, and fault data to a PDF to send to a vibration test consultant.

## System Requirements

The minimum PC system requirements to use the Viewer software are:

- Microsoft Windows 2000 / Windows XP SP2 /Windows Vista Operating system
- Minimum 1 GB RAM
- One USB port
- CD-ROM disk drive

## PC Connections

To connect the computer to the Tester:

1. Power on the computer and the Tester.
2. Connect the USB cable to the USB ports of the computer and the Tester as shown in Figure 7. See the marking on the ends of the cable for identifying the Type-A and Mini-B ends.
3. Install the supporting software and Viewer software (if not installed already). See "*Install the Viewer Software"* on the CD-ROM.

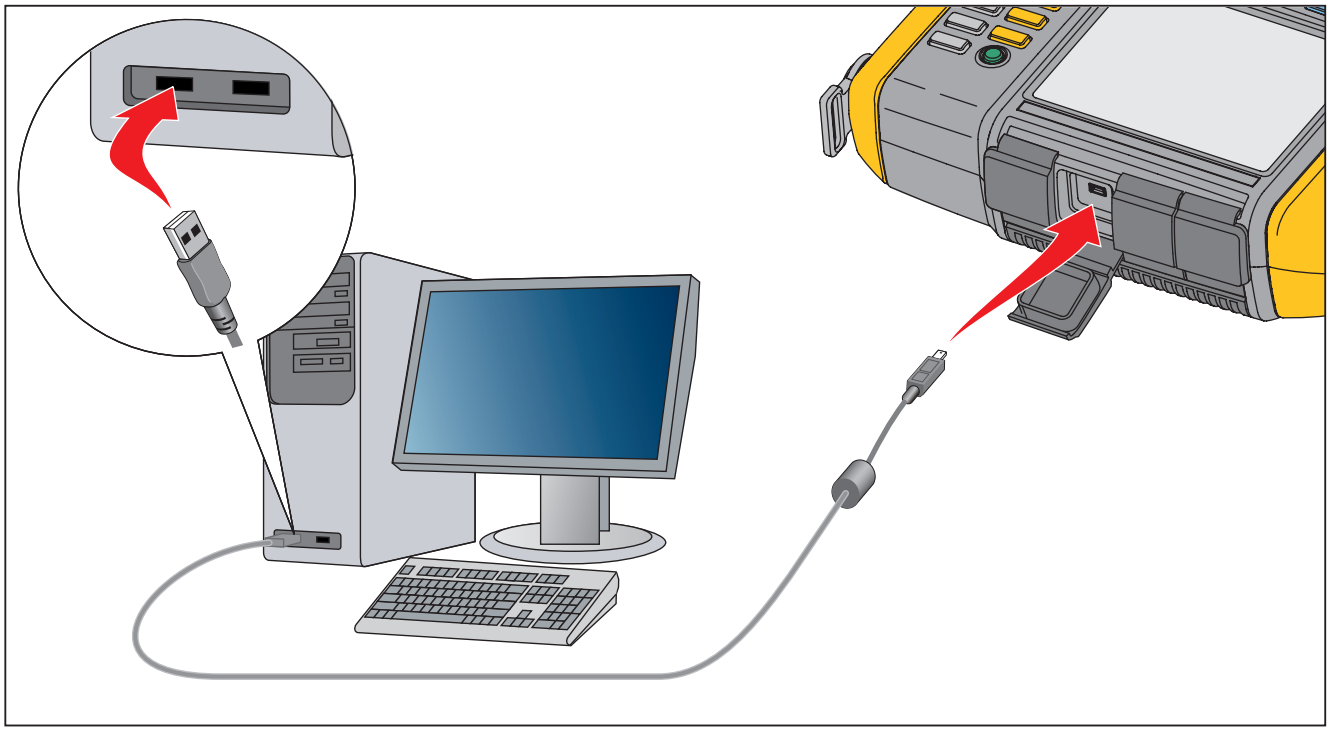

gbk05.eps

**Figure 7. Tester to PC Connections**