FLUKE®
Calibration

96000 Series

RF Reference Source

Service Manual

September 2014

© 2014 Fluke Corporation. All rights reserved. Specifications are subject to change without notice.
All product names are trademarks of their respective companies.

LIMITED WARRANTY AND LIMITATION OF LIABILITY

Each Fluke product is warranted to be free from defects in material and workmanship under normal use and service. The warranty period is one year and begins on the date of shipment. Parts, product repairs, and services are warranted for 90 days. This warranty extends only to the original buyer or end-user customer of a Fluke authorized reseller, and does not apply to fuses, disposable batteries, or to any product which, in Fluke's opinion, has been misused, altered, neglected, contaminated, or damaged by accident or abnormal conditions of operation or handling. Fluke warrants that software will operate substantially in accordance with its functional specifications for 90 days and that it has been properly recorded on non-defective media. Fluke does not warrant that software will be error free or operate without interruption.

Fluke authorized resellers shall extend this warranty on new and unused products to end-user customers only but have no authority to extend a greater or different warranty on behalf of Fluke. Warranty support is available only if product is purchased through a Fluke authorized sales outlet or Buyer has paid the applicable international price. Fluke reserves the right to invoice Buyer for importation costs of repair/replacement parts when product purchased in one country is submitted for repair in another country.

Fluke's warranty obligation is limited, at Fluke's option, to refund of the purchase price, free of charge repair, or replacement of a defective product which is returned to a Fluke authorized service center within the warranty period.

To obtain warranty service, contact your nearest Fluke authorized service center to obtain return authorization information, then send the product to that service center, with a description of the difficulty, postage and insurance prepaid (FOB Destination). Fluke assumes no risk for damage in transit. Following warranty repair, the product will be returned to Buyer, transportation prepaid (FOB Destination). If Fluke determines that failure was caused by neglect, misuse, contamination, alteration, accident, or abnormal condition of operation or handling, including overvoltage failures caused by use outside the product’s specified rating, or normal wear and tear of mechanical components, Fluke will provide an estimate of repair costs and obtain authorization before commencing the work. Following repair, the product will be returned to the Buyer transportation prepaid and the Buyer will be billed for the repair and return transportation charges (FOB Shipping Point).

THIS WARRANTY IS BUYER'S SOLE AND EXCLUSIVE REMEDY AND IS IN LIEU OF ALL OTHER WARRANTIES, EXPRESS OR IMPLIED, INCLUDING BUT NOT LIMITED TO ANY IMPLIED WARRANTY OF MERCHANTABILITY OR FITNESS FOR A PARTICULAR PURPOSE. FLUKE SHALL NOT BE LIABLE FOR ANY SPECIAL, INDIRECT, INCIDENTAL, OR CONSEQUENTIAL DAMAGES OR LOSSES, INCLUDING LOSS OF DATA, ARISING FROM ANY CAUSE OR THEORY.

Since some countries or states do not allow limitation of the term of an implied warranty, or exclusion or limitation of incidental or consequential damages, the limitations and exclusions of this warranty may not apply to every buyer. If any provision of this Warranty is held invalid or unenforceable by a court or other decision-maker of competent jurisdiction, such holding will not affect the validity or enforceability of any other provision.

Fluke Corporation
P.O. Box 9090
Everett, WA 98206-9090
U.S.A.

Fluke Europe B.V.
P.O. Box 1186
5602 BD Eindhoven
The Netherlands

11/99

Table of Contents

Chapter	Title	Page
1	**Introduction and Specifications**	**1-1**
	Introduction	1-1
	Contact Fluke Calibration	1-2
	Safety Information	1-2
	Symbols	1-3
	General Safety Summary	1-3
	Prevent Instrument Damage	1-5
	Specifications	1-7
	General Specifications (96040A and 96270A)	1-7
	Frequency Reference Input/Output Specifications (96040A and 96270A)	1-8
	Leveled Sine Specifications at Leveling Head Output (96040A and 96270A)	1-8
	Leveled Sine Specifications at Microwave Output (96270A)	1-11
	Leveled Sine Specifications at Leveling Head Output (96040A and 96270A) and Microwave Output (96270A)	1-13
	Modulation Specifications at Leveling Head Output (96040A and 96270A) and Microwave Output (96270A)	1-15
	Frequency Sweep Specifications at Leveling Head Output (96040A and 96270A) and Microwave Output (96270A)	1-18
	Frequency Counter Specifications	1-19
	Power Meter Readout Specifications (96270A only)	1-19
	GPIB Command Emulation Mode Specifications	1-19
2	**Theory of Operation**	**2-1**
	Introduction	2-1
	Overall Functional Description	2-1
	User Interface	2-3
	Frequency Synthesis	2-4
	Amplitude Control	2-4
	Frequency Modulation	2-5
	Amplitude Modulation	2-5
	Instrument Control	2-6
	Power Supplies	2-6

3 Performance Tests 3-1

Introduction 3-1
Recommended Tools and Equipment 3-1
Performance Test 3-4
Reference Frequency Accuracy 3-5
Frequency Accuracy (96040A and 96270A) 3-6
Harmonics and Spurious Signal Content - Levelling Head (96040A and 96270A) 3-9
Phase Noise Test (96040A and 96270A, Optional) 3-12
Modulation Test-Leveling Head (96040A and 96270A, Optional) 3-14
Frequency Counter Accuracy (96040A and 96270A) 3-17
Level Accuracy – 50 Ω Leveling Head (96040A and 96270A) 3-18
Attenuation Accuracy – 50 Ω Leveling Head (Optional 96040A and 96270A) 3-31
VSWR Test – 50 Ω Leveling Head (Optional 96040A and 96270A) 3-33
Level Accuracy – 75 Ω Levelling Head (96040A and 96270A) 3-36
Attenuation Accuracy – 75 Ω Leveling Head (Optional, 96040A and 96270A) 3-49
VSWR Test – 75 Ω (Optional) 3-51
Microwave Output Level Accuracy (96270A, Optional Functional Test) 3-55
Microwave Output Frequency Accuracy (96270A only) 3-66
Microwave Output Harmonics and Spurious Signal Content (96270A) 3-70
Modulation Test (96270A, Optional) 3-75

4 Calibration Adjustment 4-1

Introduction 4-1
Calibration Adjustments 4-1
Rear Panel Calibration Enable Switch 4-3
Reference Frequency Adjustment 4-3
Base Adjustment - Front Panel Head RF Output 4-4
Leveling Head Adjustment – 50 Ω 4-7
Leveling Head Adjustment – 75 Ω 4-10
Microwave Output Adjustment – With Low-Level Output Option Fitted 4-14
Microwave Output Adjustment – Low-Level Output Option Not Fitted 4-16
Microwave Output Flatness Characterization 4-18

5 Maintenance 5-1

Operator Maintenance 5-1
Clean the Product 5-1
Clean the Air Filter 5-2
Replace the Line-Power Fuses 5-2
Troubleshooting 5-4
Disassembly and Reassembly 5-4
Before You Start 5-5
Removing External Hardware Components 5-5
Handles 5-5
Top and Bottom Covers 5-6
Bottom Feet 5-6
Shields 5-6
Remove the Air Filter 5-6

Removing Major Assemblies 5-8
RF Output PCA 5-8
2 x 2W Coaxial Relays 5-10
Front Panel Assembly 5-10
Display and Keypad PCA 5-11
Digital PCA 5-12
27 GHz Control PCA (96270A) 5-13
Synthesizer PCA 5-14
Fans 5-15
Rear Panel Assemblies 5-16
Interconnection PCA 5-17
Low Voltage Transformer 5-18
Power Supply PCA 5-18
Switch Mode Power Supply Module 5-19
Leveling Head 50 Ω and 75 Ω –Disassembly and Reassembly 5-19
Leveling Head Disassembly Procedure 5-20
Leveling Head Reassembly Procedure 5-21
Reassembling the Product 5-21
Safety Test 5-21
Running Self-Test 5-22
Review the Results 5-23
Interpreting the Results 5-25
Firmware Upgrade 5-26
Equipment Required for the Restore or Upgrade 5-26
Firmware Installation 5-27

6 Lists of Replaceable Parts 6-1

Introduction 6-1
How to Obtain Parts 6-1
Replaceable Parts Lists 6-2

Appendices

A Performance Test Record A-1

List of Tables

Table	Title	Page
1-1.	Symbols	1-3
3-1.	Recommended Equipment	3-2
3-1.	Recommended Equipment	3-3
3-2.	Frequency Accuracy Test	3-7
3-3.	Harmonics Test	3-11
3-4.	Spurious Content Test	3-12
3-5.	Phase Noise Test (96040A and 96270A)	3-14
3-6.	AM Rate Test – Leveling Head (96040A and 96270A)	3-15
3-7.	AM Depth Test – Leveling Head (96040A and 96270A)	3-15
3-8.	FM Rate Test – Levelling Head (96040A and 96270A)	3-16
3-9.	FM Deviation Test – Leveling Head (96040A and 96270A	3-17
3-10.	50 Ω Leveling Head, Low Frequency Level Accuracy Test Points	3-21
3-11.	50 Ω Leveling Head, High Frequency Level Accuracy Test Points, Thermal Power Sensor (96040A and 96720A)	3-23
3-12.	50 Ω Leveling Head, High Frequency Level Accuracy Test Points, Diode Power Sensor (96040A and 96720A)	3-25
3-13.	50 Ω Leveling Head, Low-Level Accuracy Test Points Part A (96040A and 96270A)	3-28
3-13.	50 Ω Leveling Head, Low Level Accuracy Test Points (96040A and 96720A)	3-28
3-14.	50 Ω Leveling Head, Optional Ultra-Low Level Accuracy Test Points (96040A and 96270A)	3-30
3-15.	50 Ω Leveling Head Attenuation Accuracy (50 Ω) Test Points	3-32
3-16.	50 Ω Leveling Head VSWR Test (96040A and 96270A)	3-36
3-17.	Level Accuracy Test (75 Ω), Low Frequency Test Points	3-39
3-18.	75 Ω Leveling Head, High Frequency Level Accuracy Test Points (96040A and 96270A)	3-42
3-19.	75 Ω Leveling Head, Low Level Accuracy Test Points, Part A (96040A and 96270A)	3-45
3-20.	75 Ω Leveling Head, Low Level Accuracy Test Points, Part B (96040A and 96270A)	3-46
3-21.	75 Ω Leveling Head Optional Ultra-Low Level Accuracy Test (96040A and 96270A)	3-48
3-22.	Attenuation Accuracy Test - 75 Ω Leveling Head (96040A and 96270A)	3-51
3-23.	VSWR Test (75 Ω)	3-55

3-24. Microwave Output Level Accuracy Test, Low Frequency Test Points 3-58
3-25. Microwave Output Level Accuracy Test, High Frequency Test Points..... 3-61
3-26. Microwave Output Level Accuracy Test, Additional Low Level Test Points, Part A 3-64
3-27. Microwave Output Level Accuracy Test, Additional Low Level Test Points, Part B 3-65
3-28. Frequency Accuracy Test – Microwave Output..... 3-68
3-29. Harmonics Test, Microwave Output 3-73
3-30. Sub Harmonics and Interharmonics Test, Microwave Output 3-74
3-31. Microwave Output AM Rate Test 3-76
3-32. Microwave Output AM Depth Test 3-76
3-33. Microwave Output FM Rate Test..... 3-77
3-34. Microwave Output FM Deviation Test 3-77
5-1. Power Input Fuse 5-3
5-2. Descriptions of the Rows in a Test Failure Display 5-24
6-1. Final Assembly 6-2

List of Figures

Figure	Title	Page
2-1.	Overall Functional Block Diagram (96040A)	2-2
2-2.	Overall Functional Block Diagram (96270A)	2-3
2-3.	Synthesizer PCA - Simplified Schematic	2-8
2-4.	RF Output PCA - Simplified Schematic	2-9
2-5.	Leveling Head Assembly - Simplified Block Diagram	2-10
2-6.	27 GHz Control and Multiplier PCA – Simplified Schematic	2-11
3-1.	Equipment Connections - Reference Frequency Accuracy Test	3-5
3-2.	Equipment Connections - Frequency Accuracy Test	3-6
3-3.	Equipment Connections - Frequency Accuracy Test Part B	3-8
3-4.	Equipment Connections - Harmonics and Spurious Content Test	3-10
3-5.	Equipment Connections - 50 Ω Leveling Head, Low Frequency Level Accuracy Test Points (96040A and 96720A)	3-19
3-6.	Equipment Connections - 50 Ω Leveling Head, High Frequency Level Accuracy Test Points (96040A and 96720A)	3-22
3-7.	Equipment Connections - 50 Ω Leveling Head, Low Level Accuracy Test Points	3-26
3-8.	Equipment Connections - 50 Ω Leveling Head Attenuation Accuracy Test	3-31
3-9.	Equipment Connections - 50 Ω Leveling Head VSWR Test (96040A and 96270A)	3-33
3-10.	75 Ω Equipment Connections - Leveling Head, Low Frequency Level Accuracy Test Points (96040A and 96270A)	3-38
3-11.	Equipment Connections- 75 Ω Leveling Head, High Frequency Level Accuracy Test Points (96040A and 96270A)	3-40
3-12.	Equipment Connections- 75 Ω Leveling Head, Low Level Accuracy Test Points (96040A and 96270A)	3-43
3-13.	Equipment Connections - Attenuation Accuracy Test 75 Ω Leveling Head (96040A and 96270A)	3-50
3-14.	Equipment Connections - 75 Ω Levelling Head VSWR Test (96040A and 96270A)	3-53
3-15.	Microwave Output Level Accuracy Tests, Low Frequency Points Connections	3-57
3-16.	Microwave Output Level Accuracy Tests, High Frequency Points	3-59
3-17.	Microwave Output Level Accuracy Tests, Low-level Points (Low-level Microwave Output option only)	3-62

3-18. Equipment Connections - Microwave Output Frequency Accuracy Test Part A 3-67
3-19. Equipment Connections - Microwave Output Frequency Accuracy Test Part B 3-69
3-20. Equipment Connections – Microwave Output Harmonics and Spurious Content Test..... 3-71
5-1. Access the Fuse..... 5-3
5-2. Removing External Hardware and Shields..... 5-7
5-3. Removing the RF Output PCA 5-9
5-4. Removing the Front Panel Assembly 5-11
5-5. Removing the Digital PCA..... 5-12
5-6. Removing the 27 GHz Control PCA (96270A) 5-13
5-7. Removing the Synthesizer PCA..... 5-14
5-8. Removing the Fans 5-15
5-9. Removing the Rear Panel 5-17
5-10. Removing Power Supply PCA..... 5-19
5-11. Exploded View of the Leveling Head..... 5-20
5-12. Select a Self-Test Sequence..... 5-22
5-13. Summary of Self-Test Results..... 5-23
5-14. Expanded Self-Test Failure Results..... 5-23
6-1. Final Assembly 6-4

Chapter 1
Introduction and Specifications

Introduction

This manual provides performance test, calibration adjustment, and minor troubleshooting and repair procedures necessary to verify and maintain the performance of the 96000 Series RF Reference Source (the Product or the Instrument).

Note

In many of the procedures in this manual, the Instrument is referred to as the UUT (Unit Under Test). Performance test and calibration adjustment procedures apply to the 96040A and 96270A models unless otherwise noted.

The performance test is a series of tests based on the published 1-year specifications for the Instrument. Fluke Calibration recommends the performance test as an acceptance test when the Instrument is first received and later as a calibration procedure to ensure that the Instrument meets its published specifications. Fluke Calibration recommends a 1-year calibration cycle for the Instrument.

Use calibration adjustments to correct out-of-tolerance parameters so they meet published specifications. If the Instrument fails the performance test, it is an indication that the Instrument requires calibration adjustment and/or repair. While calibration adjustment can be accomplished without removal of the covers, repair requires access to the interior of the Instrument. See *Chapter 5, Maintenance* for internal access and repair information.

Note

The Instrument top cover is removable for air filter cleaning access without the need to break calibration integrity seals. A calibration integrity seal is located on the internal top shield and is revealed once the outer-top cover is removed (see Chapter 5, Maintenance *for details). Additional calibration integrity seals are located on the rear panel over the lower outer cover and over the calibration enable switch. Fluke Calibration recommends that users apply calibration integrity seals in the same three locations.*

Environmental and warm up conditions required for the performance test and calibration adjustments are stated at the beginning of each of the respective sections.

Unless otherwise directed, all connections are made via a Leveling Head of the specified impedance.

Note

The Leveling Head is an integral part of the UUT functionality.

Repairs detailed in this manual are to the Modular-level only. For repair to a deeper level, return the Product to Fluke Calibration or take the Product to a local Fluke Calibration Service Center.

Contact Fluke Calibration

To contact Fluke Calibration, call one of the following telephone numbers:

- Technical Support USA: 1-877-355-3225
- Calibration/Repair USA: 1-877-355-3225
- Canada: 1-800-36-FLUKE (1-800-363-5853)
- Europe: +31-40-2675-200
- Japan: +81-3-6714-3114
- Singapore: +65-6799-5566
- China: +86-400-810-3435
- Brazil: +55-11-3759-7600
- Anywhere in the world: +1-425-446-6110

To see product information or download manuals and the latest manual supplements, visit Fluke Calibration's website at www.flukecal.com.

To register your product, visit http://flukecal.com/register-product.

Safety Information

This section addresses safety considerations and describes symbols that may appear either in this manual or on the Instrument. A **Warning** identifies conditions and procedures that are dangerous to the user. A **Caution** identifies conditions and procedures that can cause damage to the Product or the equipment under test.

⚠⚠ Warning

To prevent possible electrical shock, fire, or personal injury, carefully read the information under *General Safety Summary* before attempting to install, use, or service the Product.

Symbols

The safety and electrical symbols shown in Table 1-1 may appear on the Instrument or in this manual.

Table 1-1. Symbols

Symbol	Meaning	Symbol	Meaning
⚠	Risk of Danger. Important information. See Manual.	⏚	Earth Terminal
⚠	Hazardous voltage. Risk of electric shock.		Recycle
IO	Power ON / OFF	CE	Conforms to European Union directives.
Intertek	Intertek ETL listed mark for CSA C22.2, 61010-1 and UL 61010-1		Conforms to relevant Australian EMC standards
~	AC (Alternating Current)		Conforms to relevant South Korean EMC standards.
	This product complies with the WEEE Directive (2002/96/EC) marking requirements. The affixed label indicates that you must not discard this electrical/electronic product in domestic household waste. Product Category: With reference to the equipment types in the WEEE Directive Annex I, this product is classed as category 9 "Monitoring and Control Instrumentation" product. Do not dispose of this product as unsorted municipal waste. Go to Fluke's website for recycling information.		

General Safety Summary

This manual contains information and warnings that must be observed to keep the Instrument in a safe condition and ensure safe operation. Using or servicing the Instrument in conditions other than as specified in this manual could compromise your safety.

To use the Instrument correctly and safely, read and follow the precautions on the next few pages, as well as the safety instructions or warnings given throughout this manual. In addition, follow all generally accepted safety practices and procedures when working with and around electricity.

⚠⚠Warning

To prevent possible electrical shock, fire, or personal injury:

- **Read all safety information before you use the Product.**
- **Carefully read all instructions.**
- **Use the Product only as specified, or the protection supplied by the Product can be compromised.**
- **Do not use the Product if it operates incorrectly.**
- **Do not use the Product around explosive gas, vapor, or in damp or wet environments.**
- **Disable the Product if it is damaged.**
- **Do not use the Product if it is damaged.**
- **Use this Product indoors only.**
- **Use only the mains power cord and connector approved for the voltage and plug configuration in your country and rated for the Product.**
- **Do not apply hazardous voltages to any connector other than the mains supply to the mains input.**
- **Make sure the ground conductor in the mains power cord is connected to a protective earth ground. Disruption of the protective earth could put voltage on the chassis that could cause death.**
- **Replace the mains power cord if the insulation is damaged or if the insulation shows signs of wear.**
- **If the mains power cord is to be the accessible disconnect device, the mains power cord must not be longer than 3 meters (118.1 inches).**
- **Turn the Product off and remove the mains power cord. Stop for 2 minutes to let the power assemblies discharge before you open the fuse door.**
- **Do not operate the Product with covers removed or the case open. Hazardous voltage exposure is possible.**
- **Restrict the humidity of the operating environment to the level specified for any equipment used that conforms to IEC60950-1 used with the Product.**
- **Remove the input signals before you clean the product.**
- **Use only specified replacement parts.**
- **Use only specified replacement fuses.**
- **Have an approved technician repair the Product.**
- **Do not apply more than the rated voltage, between the terminals or between each terminal and earth ground.**
- **Use good lifting practices when lifting or moving the Product. The Product is an unbalanced load and can weigh as much as 18 kg (40 pounds).**

Prevent Instrument Damage

⚠ Caution

To prevent possible damage to the Product or to equipment under test:

- **The front panel Head RF Output and Head Control connectors on the Product are suited only for use with Fluke 96040A-xx Leveling Heads or the 9600FLT 1-GHz Wide Offset Filter. Only compatible power sensors should be connected to the front panel Sensor connectors. No other connections are permitted.**
- **The Leveling Heads are fitted with close tolerance metrology grade N-connectors compliant with MIL-C-39012 and MMC Standards for Precision N-connectors. When used in demanding metrology applications the Leveling Heads are likely to be mated with similar high-quality connectors, thus, minimizing the opportunity for wear and damage. However, in applications that require frequent mating or mating to lower quality connectors, the opportunity for damaging the connectors increases. On these high-risk occasions, consider using a sacrificial adapter to prevent damage to the N connectors.**
- **Improper mating of 50 Ω and 75 Ω connectors will cause irreversible damage the center pin. Although appearance is similar, the dimensions (pin diameter) of 75 Ω differ significantly from those of 50 Ω. Make sure that the 50 Ω Leveling Head is mated only to 50 Ω systems and, likewise, that the 75 Ω Leveling Head is mated only with 75 Ω systems. Otherwise, mechanical damage of metrology-grade connectors and out-of-tolerance performance is likely to occur.**
- **Very high-grade flexible coaxial transmission line conducts the RF input signal to 96040A-xx Leveling Heads. As with any coaxial line, deformation of sidewalls or abrupt bending can degrade performance. Take care to avoid mechanical stress or tight bend radius < 60 mm (2.4 in).**
- **Critical connector mating dimensions could be damaged during disassembly of a Leveling Head. DO NOT TAMPER with the four mounting screws at the base of the N-Connector. Leveling Head disassembly should only be performed by qualified service personnel at a Fluke Service Center.**

- **The optional power sensor(s) contain components which can be destroyed by electrostatic discharges. To prevent this, never touch the sensor RF connector inner conductor and never open the sensor. Never exceed the sensor maximum RF power limit. Even brief overloads can destroy the sensor.**
- **Reliable and repeatable RF interconnections are achieved only at specified torque settings. Performance will be impaired if torque settings are not observed, and permanent connector damage is likely to result from over-tightening.**
- **To prevent damage to the Product, do not use aromatic hydrocarbons or chlorinated solvents for cleaning.**
- **To prevent the public transmission of an unintentional RF signal, never connect the Product output to an antenna outside a shielded room.**

Specifications

General Specifications (96040A and 96270A)

Performance	All specifications apply to a 1-year calibration interval at an ambient temperature of Tcal ±5 °C. Nominal factory Tcal calibration temperature 23 °C. Unless otherwise noted, specifications are stated at a 99 % confidence level
Standard Interfaces	IEEE488.2 (GPIB) 96270A only: Compatible power sensor inputs [1] 96270A only: USB memory device
Warmup Time	60 minutes
Temperature	Operating: 0 °C to 50 °C Specified Operation: 5 °C to 40 °C Storage: -20 °C to +70 °C
Relative Humidity	Operating or Storage: Non-condensing, 5 °C to 30 °C <90 %, <40 °C <75 %, <70 °C <45 %
Altitude	Operating: ≤2,000 m Non-operating: ≤12,000 m
Safety	EN 61010-1: Pollution Degree 2, Installation Category II
Electromagnetic Compatibility	EN 61326 -1: Controlled. Applies to use in Korea only. Class A Equipment (Industrial Broadcasting & Communication Equipment) [2] [2] This product meets requirements for industrial (Class A) electromagnetic wave equipment and the seller or user should take notice of it. This equipment is intended for use in business environments and is not to be used in homes.
Line Power	Voltage: 100 V to 240 V rms with additional voltage fluctuations of ±10 %. Frequency: 50 Hz to 60 Hz with additional frequency variation of ±3 Hz.
Power Consumption	250 VA
Dimensions	442 mm (17.4 in) wide, 146 mm (5.76 in) high and 551 mm (21.7 in) deep, including handles. Mounts within industry-standard 483 mm (19 in) rack-mount frames when fitted with Y9600 rack mounting kit.
Weight	18 kg (40 lb)
[1] See Power Meter Readout specifications for compatible power sensor details.	

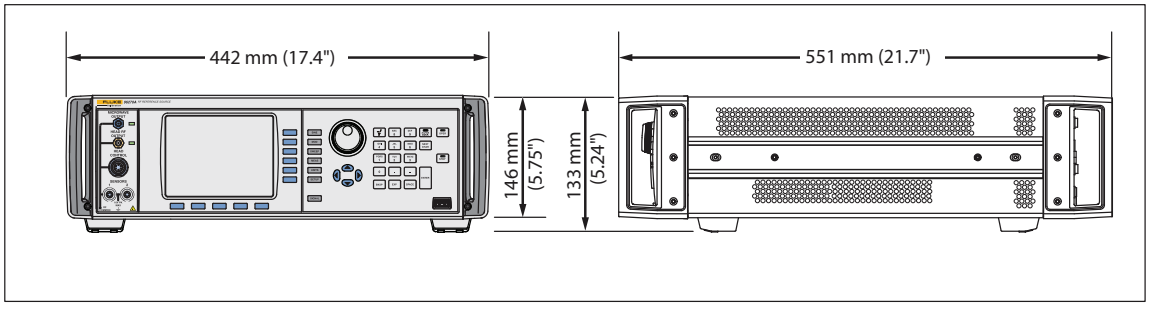

hpn366eps

96040A and 96270A Dimensions

Frequency Reference Input/Output Specifications (96040A and 96270A)

Frequency Reference Input	Rear-panel Reference Frequency Input BNC connector
Frequency	1 MHz to 20 MHz in 1 MHz steps ±0.3 ppm, typical
Level	1 V pk nominal into 50 Ω, ±5 V pk max

Frequency Reference Output	Rear-panel Reference Frequency Output BNC connector
Frequency	1 MHz or 10 MHz, user selectable
Level	1.5 V pk-pk into 50 Ω, 3 V pk-pk into 1 kΩ, TTL compatible
Accuracy [1] [2]	±0.05 ppm
Ageing Rate and Stability [2]	After 24-hr warmup: $\leq\pm 5 \times 10^{-10}$/day, typical Continuous operation: $\leq\pm 2 \times 10^{-8}$/month typical, $\leq\pm 5 \times 10^{-8}$ over 1 year

[1] Includes all stability effects for the 1-year calibration interval and Tcal ±5 °C temperature range applicable to all specifications.
[2] Specifications apply only if Internal Frequency Reference operation is selected. With External Frequency Reference operation selected, the frequency of the Frequency Reference Output is locked to the signal applied to the Frequency Reference Input.

Leveled Sine Specifications at Leveling Head Output (96040A and 96270A)

Frequency	
Range	1 mHz to 4 GHz
Resolution	Standard: <100 MHz: 0.001 Hz (1 mHz), ≥100 MHz: 11 digits Enhanced: 0.000 01 Hz (10 µHz)
Accuracy	Internal Frequency Reference: ±0.05 ppm ± 5 µHz External Frequency Reference: Ext Freq Ref Accuracy ±5 µHz

Amplitude	**50 Ω Output**	**75 Ω Output**
Output Connector	Precision 50 Ω N-Series male	Precision 75 Ω N-Series male
Range	-130 dBm to +24 dBm (0.2 µV to 10 V pk-pk) >125 MHz: +20 dBm >1.4 GHz: +14 dBm	-130 dBm to +18 dBm (0.13 µV to 6.3 V pk-pk) >125 MHz: +14 dBm >1.4 GHz: +8 dBm
Resolution	0.001 dB	0.001 dB
VSWR	≤100 MHz: ≤1.05 ≤2 GHz: ≤1.1 2 GHz to 4 GHz: ≤1.0 + 0.05 x f (GHz)	≤100 MHz: ≤1.1 ≤1 GHz: ≤1.2 ≤2 GHz: ≤1.3

Attenuation	50 Ω Output	75 Ω Output
Attenuation 10 Hz [1] to 128 MHz	Relative to +16 dBm output: 0 - 55 dB ±0.025 dB 55 - 64 dB ±0.03 dB 64 - 74 dB [1] ±0.05 dB 74 - 100 dB [1] ±0.07 dB 100 - 116 dB [1] ±0.15 dB Relative to +10 dBm output: 0 - 49 dB ±0.02 dB 49 - 59 dB ±0.03 dB 59 - 69 dB [1] ±0.05 dB 69 - 94 dB [1] ±0.07 dB 94 - 110 dB [1] ±0.15 dB	Relative to +10 dBm output 0 - 33 dB ±0.07 dB 33 - 64 dB ±0.1 dB 64 - 100 dB [2] ±0.2 dB 100 - 110 dB [2 ±0.4 dB
Cumulative and Incremental Attenuation To determine the attenuation specification between any two output levels, apply an RSS [3] summation of the dB values listed for each output level.	Relative to any level between +10 dBm and -100 dBm, 10 Hz [1] to 128 MHz +16 to +10 dBm ±0.025 dB +10 to -39 dBm ±0.02 dB -39 to -48 dBm ±0.03 dB -48 to -58 dBm [1] ±0.05 dB -58 to -84 dBm [1] ±0.07 dB -84 to -100 dBm [1] ±0.15 dB	Relative to any level between +10 dBm and -100 dBm, 10 Hz [2] to 128 MHz +10 to -23 dBm ±0.07 dB -23 to -54 dBm ±0.1 dB -54 to -90 dBm [2 ±0.2 dB -90 to -100 dBm [2] ±0.4 dB

[1] 50 Ω Output attenuation specifications are typical at absolute levels of less than -48 dBm up to 20 kHz, at less than -74 dBm up to 100 kHz, and at less than -84 dBm at all frequencies.

[2] 75 Ω Output attenuation specifications are typical at absolute levels of less than -54 dBm up to 20 kHz, at less than -80 dBm up to 100 kHz, and at less than -90 dBm at all frequencies.

Absolute Amplitude Accuracy	50 Ω Output							
Amplitude								
dBm	10 Hz [1] to <100 kHz	100 kHz	>100 kHz to <10 MHz	10 MHz to 128 MHz	>128 MHz to 300 MHz	>300 MHz to 1.4 GHz	>1.4 GHz to 3 GHz	>3 GHz to 4 GHz
>+20 to +24	±0.03 dB	±0.03 dB	±0.05 dB	±0.05 dB	Output not available			
>+14 to +20	±0.03 dB	±0.03 dB	±0.05 dB	±0.05 dB	±0.07 dB	±0.2 dB		
-17 to +14	±0.03 dB	±0.03 dB	±0.05 dB	±0.05 dB	±0.07 dB	±0.2 dB	±0.3 dB	±0.3 dB
-48 to <-17	±0.03 dB	±0.03 dB	±0.05 dB	±0.05 dB	±0.07 dB	±0.2 dB	±0.3 dB	±0.5 dB
>-74 to <-48	Not Specified	±0.2 dB	±0.2 dB	±0.1 dB	±0.1 dB	±0.4 dB	±0.5 dB	±0.5 dB
>-84 to -74		±0.5 dB	±0.5 dB	±0.1 dB	±0.3 dB	±0.5 dB	±1.0 dB	±1.0 dB
>-94 to -84		±0.5 dB	±0.5 dB	±0.3 dB	±0.5 dB	±1.0 dB	±1.0 dB	Not Specified
-130 to -94				±0.7 dB	±1.5 dB	±1.5 dB	±1.5 dB [2]	

[1] Also applies as typical accuracy at frequencies <10 Hz.

[2] Specification are typical

Amplitude Flatness relative to 100 kHz	**50 Ω Output**							
Amplitude								
dBm	10 Hz [1] to <100 kHz	100 kHz	>100 kHz to <10 MHz	10 MHz to 128 MHz	>128 MHz to 300 MHz	>300 MHz to 1.4 GHz	>1.4 GHz to 3 GHz	>3 GHz to 4 GHz
>+20 to +24	±0.03 dB	±0.00 dB	±0.04 dB	±0.04 dB	Output not available			
>+14 to +20	±0.03 dB	±0.00 dB	±0.04 dB	±0.04 dB	±0.06 dB	±0.2 dB		
-17 to +14	±0.03 dB	±0.00 dB	±0.04 dB	±0.04 dB	±0.06 dB	±0.2 dB	±0.3 dB	±0.3 dB
-48 to <-17	±0.03 dB	±0.00 dB	±0.04 dB	±0.04 dB	±0.06 dB	±0.2 dB	±0.3 dB	±0.5 dB
>-74 to <-48		±0.00 dB	±0.2 dB	±0.1 dB	±0.1 dB	±0.4 dB	±0.5 dB	±0.5 dB
>-84 to -74		±0.00 dB	±0.5 dB	±0.1 dB	±0.3 dB	±0.5 dB	±1.0 dB	±1.0 dB
>-94 to -84		±0.00 dB	±0.5 dB	±0.3 dB	±0.5 dB	±1.0 dB	±1.0 dB	
-130 to -94	Not Specified							

[1] Also applies as typical accuracy at frequencies <10 Hz.

Absolute Amplitude Accuracy	**75 Ω Output**							
Amplitude								
dBm	10 Hz [1] to <20 kHz	>20 kHz to <100 kHz	>100 kHz to <10 MHz	10 MHz to 125 MHz	>125 MHz to 300 MHz	>300 MHz to 1.4 GHz	>1.4 GHz [2] to 3 GHz	>3 GHz [2] to 4 GHz
>+14 to +18	±0.12 dB	±0.12 dB	±0.12 dB	±0.12 dB	Output not available			
>+8 to +14	±0.12 dB	±0.12 dB	±0.12 dB	±0.12 dB	±0.15 dB	±0.25 dB		
-23 to +8	±0.12 dB	±0.12 dB	±0.12 dB	±0.12 dB	±0.15 dB	±0.25 dB	±0.3 dB	±0.5 dB
-54 to <-23	±0.15 dB	±0.15 dB	±0.15 dB	±0.15 dB	±0.2 dB	±0.5 dB	±0.5 dB	±0.5 dB
>-80 to <-54	Not Specified		±0.2 dB	±0.2 dB	±0.2 dB	±0.5 dB	±0.5 dB	±0.5 dB
>-90 to -80			±0.7 dB	±0.7 dB	±0.7 dB	±1.0 dB	±1.0 dB	±1.0 dB
>-100 to -90			±0.7 dB	±0.7 dB	±0.7 dB	±1.0 dB	±1.0 dB	Not Specified
-120 to -100				±1.5 dB	±1.5 dB	±1.5 dB	±1.5 dB	

[1] Also applies as typical accuracy at frequencies <10 Hz.
[2] Specifications are typical for frequencies >2 GHz

Leveled Sine Specifications at Microwave Output (96270A)

Frequency	
Range	1 mHz to 27 GHz
Resolution	Standard: <100 MHz: 0.001 Hz (1 mHz), ≥100 MHz: 11 digits, ≥10 GHz 12 digits Enhanced: <4 GHz: 0.000 01 Hz (10 µHz), ≥4 GHz: 0.000 1 Hz (100 µHz)
Accuracy	Internal Frequency Reference: ±0.05 ppm ±5 µHz External Frequency Reference: ±5 µHz

Microwave Output Direct	At the front panel Microwave Output connector. Amplitude set on instrument front panel and delivered at the front panel Microwave Output connector.
Amplitude Range	-4 dBm to +24 dBm [1] >1.4 GHz: +20 dBm [1] With Low-Level Microwave Output option [2]: -100 dBm to +24 dBm [1] >1.4 GHz: +20 dBm [1] >20 GHz: +18 dBm [1]
Amplitude Resolution	0.001 dB
Amplitude Accuracy (Typical, into 50 Ω)	-4 dBm to +24 dBm up to 4 GHz: ±0.5 dB 4 GHz to 26.5 GHz: ±1.0 dB
VSWR	≤2.0 typical
Connector	PC2.92 mm female

[1] Amplitude specifications apply into 1.0 VSWR match only.
[2] Internal step attenuator rated to 1.5 million operations.

Microwave Splitter/Sensor Output [1]	At the leveling splitter output port connector. Amplitude set on instrument front panel and delivered at the splitter output port connector.
Leveling Frequency Range	1 kHz minimum, to avoid leveling control tracking instantaneous signal level at lower frequencies
Amplitude Range	-10 dBm to +18 dBm [2] (200 mV to 5 V pk-pk) >1.4 GHz: +14 dBm [2] (3.17 V pk-pk) With Low-Level Microwave Output option [3]: -35 dBm [4] to +18 dBm [2] (11.2 mV to 5 V pk-pk) >1.4 GHz: +14 dBm [2] (3.17 V pk-pk) >20 GHz: +12 dBm [2] (2.52 V pk-pk)
Amplitude Resolution	0.001 dB
VSWR	≤1.22 (HF Leveling Kit splitter device output port VSWR specification)
Connector	PC3.5 mm female (HF Leveling Kit splitter device output port connector)

[1] Requires the HF Leveling Kit or compatible power sensor and splitter with splitter/sensor leveling enabled. Automatic feedback establishes and maintains the level set on the instrument user interface at the splitter output port connector. See Power Meter Readout specifications for compatible power sensor details.
[2] Amplitude range specifications are nominal, apply into 1.0 VSWR match only. Maximum output assumes a typical 6 dB splitter loss and is also influenced by loss in the front panel Microwave output to splitter input interconnection.
[3] Internal step attenuator rated to 1.5 million operations
[4] Leveling operational to -35 dBm minimum with supplied HF Leveling Kit power sensor. As level decreases additional sensor low level reading repeatability/speed considerations and noise floor contributions may be required.

Microwave Splitter/Sensor Output: Cal Factor Uncertainty [1] [2] Calibration Factor uncertainty, applicable to power sensor calibration								
Figures in parenthesis[3] apply with alternative user traceability and correction of mismatch errors.	100 MHz	1 GHz	2.4 GHz	8 GHz	12 GHz	18 GHz	22 GHz	26.5 GHz
	±1.06 % (±0.37 %)	±1.42 % (±0.49 %)	±1.42 % (±0.60 %)	±2.19 % (±0.76 %)	±2.33 % (±0.89 %)	±2.91 % (±1.06 %)	±3.52 % (±1.36 %)	±3.52 % (±2.18 %)

[1] Uncertainties are for 95% confidence level (k = 2), and exclude UUT match contribution.

[2] Unless otherwise stated, applies to performance with supplied HF Leveling Kit and sensors, factory calibration and self-characterization. Self-characterization requires second sensor option.

[3] Calibration factor uncertainty applicable with reference sensor calibrated with typical state-of-the-art uncertainty, and vector corrections for mismatch errors at splitter output port.

Microwave Splitter/Sensor Output: Power Flatness Uncertainty [1] [2] Power Flatness uncertainty, applicable to spectrum analyzer and other measurement device flatness calibration						
Power Flatness uncertainty into 50 Ω (1.0 VSWR match)	>1 kHz to 100 MHz	>100 MHz to 2.4 GHz	>2.4 GHz to 8 GHz	>8 GHz to 12.4 GHz	>12.4 GHz to 18 GHz	>18 GHz to 26.5 GHz
	±0.05 dB	±0.07 dB	±0.10 dB	±0.10 dB	±0.13 dB	±0.16 dB

[1] Uncertainties are specified for 95 % confidence level (k = 2), and exclude UUT match contribution.

[2] Applies to performance with supplied HF Leveling Kit and sensors, factory calibration and self-characterization. Self-characterization requires second sensor option.

Microwave Splitter/Sensor Output: Voltage Flatness Uncertainty [1] [2] Voltage Flatness uncertainty, applicable to oscilloscope bandwidth calibration							
Voltage Flatness uncertainty into 50 Ω		>1 kHz to 100 MHz	>100 MHz to 2.4 GHz	>2.4 GHz to 8 GHz	>8 GHz to 12.4 GHz	>12.4 GHz to 18 GHz	>18 GHz to 26.5 GHz
For stated UUT Input VSWR:	1.0	±0.53 %	±0.71 %	±1.10 %	±1.16 %	±1.46 %	±1.76 %
	1.2	±1.4 %	±1.49 %	±1.71 %	±1.75 %	±1.96 %	±2.20 %
	1.6	±3.38 %	±3.41 %	±3.51 %	±3.53 %	±3.64 %	±3.77 %

[1] Uncertainties are specified for 95 % confidence level (k = 2), and include UUT match contribution for the stated UUT input VSWR values.

[2] Applies to performance with supplied HF Leveling Kit and sensors, factory calibration and self-characterization. Self-characterization requires second sensor option.

Leveled Sine Specifications at Leveling Head Output (96040A and 96270A) and Microwave Output (96270A)

Signal Purity	At maximum output level
Harmonics [1]	≤1 GHz: <-60 dBc, >1 GHz: <-55 dBc
Spurious ≥3 kHz offset	96040A and 96270A: ≤9 MHz: <-75 dBc, ≤500 MHz: <-84 dBc, ≤1 GHz: <-78 dBc, ≤2 GHz: <-72 dBc, ≤4 GHz: <-66 dBc 96270A: ≤8 GHz: <-60 dBc, ≤16 GHz: <-54 dBc, ≤27 GHz: <-48 dBc
Sub-harmonics	≤ 4 GHz, none > 4 GHz, <-60 dBc
SSB AM Noise	10 MHz to 1.4 GHz, <0.015 % RMS, in 50 Hz to 3 kHz Bandwidth, typical
[1] Typical for harmonic content above maximum output frequency for 96270A.	

Residual FM	**Hz RMS in 50 Hz to 3 kHz Bandwidth Typical**	**Hz RMS in 50 Hz to 15 kHz Bandwidth Typical**
125 MHz	0.004	0.03
250 MHz	0.006	0.035
500 MHz	0.01	0.055
1 GHz	0.02	0.11
2 GHz	0.04	0.22
3 GHz	0.06	0.33

RMS Jitter	**Typical, at +10 dBm output level, Internal Frequency Reference**		
Output Frequency	**Integration Bandwidth**	**Phase (m° RMS)**	**Time (fs RMS)**
155 MHz	100 Hz to 1.5 MHz	1.0	18
622 MHz	1 kHz to 5 MHz	4.0	18
2488 MHz	5 kHz to 20 MHz	14.4	16

SSB Phase Noise	dBc/Hz, at +13 dBm, Internal Frequency Reference								
Carrier Frequency	Offset from Carrier								
	1 Hz Spec (Typical)	10 Hz Spec (Typical)	100 Hz Spec (Typical)	1 kHz Spec (Typical)	10 kHz Spec (Typical)	100 kHz Spec (Typical)	1 MHz Spec (Typical)	10 MHz Spec (Typical)	100 MHz Spec (Typical)
10 MHz	-96 (-106)	-116 (-123)	-132 (-139)	-143 (-149)	-150 (-155)	-153 (-157)	-154 (-157)	Not Specified	
>10 MHz to 15.625 MHz	-90 (-100)	-113 (-124)	-130 (-139)	-142 (-148)	-149 (-155)	-152 (-157)	-154 (-158)	-155 (-159)	
>15.625 MHz to 31.25 MHz	-85 (-95)	-110 (-119)	-128 (-135)	-141 (-145)	-148 (-152)	-152 (-157)	-153 (-158)	-155 (-159)	
>31.25 MHz to 62.5 MHz	-80 (-90)	-107 (-114)	-125 (-133)	-141 (-145)	-148 (-152)	-152 (-157)	-153 (-158)	-155 (-159)	
>62.5 MHz to 125 MHz	-78 (-88)	-101 (-107)	-121 (-128)	-141 (-146)	-148 (-153)	-151 (-155)	-153 (-156)	-155 (-158)	
>125 MHz to 250 MHz	-72 (-82)	-96 (-102)	-116 (-122)	-138 (-143)	-148 (-152)	-151 (-155)	-153 (-156)	-155 (-158)	(-162)
>250 MHz to 500 MHz	-66 (-76)	-90 (-96)	-110 (-116)	-134 (-139)	-144 (-148)	-146 (-150)	-152 (-155)	-154 (-157)	(-163)
>500 MHz to 1 GHz	-59 (-69)	-84 (-90)	-104 (-110)	-130 (-135)	-140 (-144)	-141 (-145)	-148 (-152)	-152 (-155)	(-156)
>1 GHz to 2 GHz	-54 (-64)	-78 (-84)	-98 (-104)	-124 (-130)	-134 (-138)	-135 (-139)	-144 (-147)	-148 (-150)	(-150)
>2 GHz to 3 GHz	-48 (-58)	-73 (-79)	-94 (-100)	-120 (-125)	-130 (-134)	-131 (-135)	-141 (-144)	-147 (-149)	(-149)
>3 GHz to 4 GHz	-44 (-54)	-74 (-80)	-94 (-100)	-113 (-117)	-117 (-120)	-118 (-121)	-130 (-133)	-147 (-149)	(-149)
>4 GHz to 8 GHz [1]	(-48)	(-74)	(-94)	(-111)	(-114)	(-115)	(-135)	(-155)	(-155)
>8 GHz to 16 GHz [1]	(-42)	(-68)	(-88)	(-105)	(-108)	(-109)	(-129)	(-149)	(-149)
>16 GHz to 26.5 GHz [1]	(-36)	(-62)	(-82)	(-99)	(-102)	(-103)	(-123)	(-143)	(-143)
SSB Phase Noise at 1 GHz with the 9600FLT [2] wide offset phase noise filter							(-152)	(-170)	(-174)

[1] 96270A Microwave Output only

[2] The 9600FLT Wide Offset Phase Noise Filter accessory is a narrow bandwidth 1 GHz bandpass filter for use with the 96000 Series models to reduce phase noise levels at high offset frequencies when operating at an output frequency of 1 GHz.

External Leveling Input [1]	Rear panel 50 MHz Counter, Modulation, Leveling and Frequency Pull Input BNC connector
For external power meter leveling [2]	User adjustable full scale voltage, 1 V to 5 V, positive polarity.
Input impedance	10 kΩ nominal
Maximum Input	±5 V

[1] For 96270A, External Leveling is not available when using Splitter/Sensor Leveling.

[2] With analog level control feedback from an external power meter readout instrument connected via the rear panel External Leveling Input.

External Frequency Control Input	Rear panel 50 MHz Counter, Modulation, Leveling and Frequency Pull Input BNC connector
Frequency Pull Range	±5 ppm
Frequency Pull Sensitivity	User adjustable between 0.0001 ppm/V to 1.0000 ppm/V, positive or negative polarity
Input impedance	10 kΩ nominal
Maximum Input	±5 V

Modulation Specifications at Leveling Head Output (96040A and 96270A) and Microwave Output (96270A)

Amplitude Modulation	**Microwave Output [1] (96270A only)**	**Leveling Head Output**	
		50 Ω output	**75 Ω output**
Waveform	Sinusoidal, Triangle, or External signal		
Carrier Frequency	50 kHz to 4 GHz		
Carrier Level	<1.4 GHz: ≤+14 dBm >1.4GHz: ≤+8 dBm	<1.4 GHz: ≤+14 dBm >1.4 GHz: ≤+8 dBm	<1.4 GHz: ≤+8 dBm >1.4 GHz: ≤+2 dBm
Carrier Level Accuracy [2]	As Leveled Sine ± 0.5 dB, typical		
Carrier Harmonics	≤50 dBc typical		
Rate	≤125.75 MHz, 1 Hz to 220 Hz, ≤1 % of Carrier Frequency >127.75 MHz, 1 Hz to 100 kHz		
Rate Resolution	0.1 Hz, 5 digits		
Rate Accuracy	≥1 kHz: ±1 digit, <1 kHz: ±10 mHz		
Depth	0.1 % to 99 %		
Depth Resolution	0.1 %		
Carrier Frequency and Level Range for Specified Depth Accuracy and Distortion	≤1 GHz, -4 dBm to +14 dBm -56 dBm with Low Level Microwave O/P Option	≤1 GHz, -56 dBm to +14 dBm	≤1 GHz, -62 dBm to +8 dBm
AM Sine Depth Accuracy [3]	±3 % of setting ±0.1 %, for >5 % depth. Typically ±0.75 % of setting ±0.1 %, for 10 % to 90 % depth, ≤75 MHz carrier frequency.		
AM Sine Distortion [3] [4]	≤-40 dBc, 10 % to 80 % depth, for ≤20 kHz rate, or for >20 kHz rate at ≤75 MHz carrier frequency. Typically ≤-50 dBc, 10 % to 80 % depth, ≤75 MHz carrier frequency.		

[1] Modulation not available above 4 GHz. All signal level specifications apply at front panel Microwave Output connector. Splitter/Sensor leveling not available in Modulation functions.
[2] Signal content at carrier frequency only, excluding sidebands.
[3] Applies to demodulated signal content at rate fundamental frequency. Specifications are typical for modulation rates < 20Hz.
[4] Includes harmonic distortion and noise up to 5 times rate frequency.

AM External	
Input	Rear-panel BNC connector (50 MHz Counter, Modulation, Leveling and Frequency Pull Input). 10 kΩ nominal input impedance.
Bandwidth (-3 dB) [1]	DC coupled [2]: dc to 220 kHz, typical. AC coupled: 10 Hz to 220 kHz, typical.
Depth Sensitivity	User adjustable, 0.5 %/V to 400 %/V
Input Level	±2 V pk maximum operating, ±5 V pk absolute maximum
Carrier Level Accuracy	As AM Internal Sine + 20 mV x depth/V setting, typical
Depth Accuracy [3]	±3 % of setting ± 0.1 %, for >5 % depth, 1 Vpk input, dc or 200 Hz to 20 kHz
Residual Distortion [4]	As AM Internal Sine, for 1 Vpk input, ≤100 kHz.

[1] Maximum input frequency 100 kHz for carrier frequency >125 MHz.
[2] DC coupled External Modulation permits dc control of carrier level or the offsetting of the modulation waveform. Note that at rates from 0.5 Hz to 10 Hz interaction with carrier leveling may occur, resulting in modulation distortion.
[3] Applies to demodulated signal content at rate frequency fundamental.
[4] Includes harmonic distortion and noise up to 5 times rate frequency.

Frequency and Phase Modulation [1] [2]	
Waveform	FM: Sinusoidal, or External signal PM: Sinusoidal, or External signal
Carrier Frequency (Fc)	9 MHz to 4 GHz
Carrier Frequency Accuracy	Internal Frequency Reference: ±0.05 ppm ±240 mHz External Frequency Reference: Ext Freq Ref Accuracy ±240 mHz
Rate (Fr)	1 Hz to 300 kHz
Rate Resolution	0.1 Hz, 5 digits
Rate Accuracy	≥1 kHz: ±1 digit, <1 kHz: ±10 mHz
Deviation (Fd) [3]	Fc 9 MHz to 31.25 MHz FM: 10 Hz to 300 kHz PM: ≤1000 rad Fc 31.25 MHz to 125 MHz FM: 10 Hz to 750 kHz PM: ≤1000 rad Fc 125 MHz to 4 GHz FM: 10 Hz to 0.12 % Fc PM: ≤1000 rad or 0.12 % Fc/Fr
Deviation Resolution	FM: 0.1 Hz, 5 digits. PM: 0.0001 rad, 5 digits
FM/PM Sine Deviation Accuracy [2]	±3 % of setting ±240 mHz. Typically ±0.25 % of setting ±240 mHz, for ≤50 kHz rate.
FM/PM Sine Distortion [3] [4]	≤-40 dBc (1 %) +20 dB/decade above 10 kHz (See chart). Typically ≤-65 dBc +20 dB/decade above 1 kHz.

[1] 96270A: Modulation not available above 4 GHz. Splitter/Sensor leveling not available in Modulation functions.
[2] Internal phase modulation is generated by applying sinusoidal frequency modulation with peak deviation derived from the phase deviation and rate settings (Fd = ϕd x Fr).
[3] See chart showing maximum available deviation, and maximum deviation for which deviation accuracy and distortion specifications apply. Applies to demodulated signal content at rate frequency fundamental. Specifications are typical for modulation rates <20 Hz.
[4] Includes harmonic distortion and noise up to 5 times rate frequency.

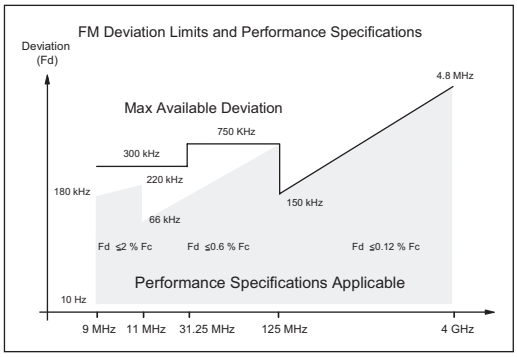

hpn367.eps

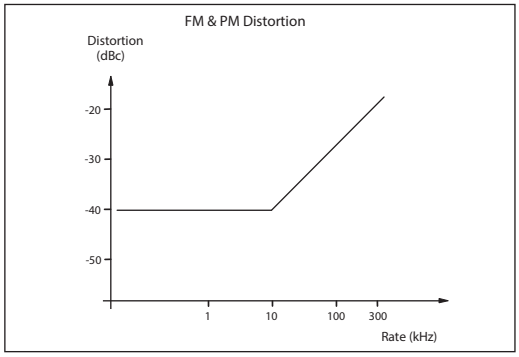

hpn368.eps

FM External	
Input	Rear-panel BNC connector (50 MHz Counter, Modulation, Leveling and Frequency Pull Input).10 kΩ nominal input impedance.
Bandwidth (-3 dB)	DC coupled: dc to 1 MHz, typical. AC coupled: 10 Hz to 1 MHz, typical.
Deviation Sensitivity	User adjustable, 500 Hz/V to 19 MHz/V, carrier frequency dependent.
Input Level	±2 V pk maximum operating, ±5 V pk absolute maximum
Carrier Frequency Accuracy	As FM Internal Sine ±20 mV x deviation/V setting, typical.
Deviation Accuracy [1]	±3 % of setting ± 240 mHz, for 1 Vpk input, dc or 200 Hz to 20 kHz rate, deviation >0.01 % Fc.
Residual Distortion [1] [2]	As FM Internal Sine, for 1 Vpk input, deviation >0.01 %Fc. Typically ≤-55 dBc +20 dB/decade above 10 kHz, for 1 Vpk input, deviation >0.01 % Fc.

[1] See chart showing maximum available deviation, and maximum deviation for which deviation accuracy and residual distortion specifications apply. Applies to demodulated signal content at rate fundamental frequency.

[2] Includes harmonic distortion and noise up to 5 times rate frequency.

PM External [1]	
Input	Rear-panel BNC connector (50 MHz Counter, Modulation, Leveling and Frequency Pull Input). 10 kΩ nominal input impedance.
Bandwidth (-3 dB)	DC coupled: dc to 1 MHz, typical. AC coupled: 10 Hz to 1 MHz, typical.
Deviation Sensitivity	User adjustable, 0.001 rad/V to 96 rad/V, carrier frequency dependent
Input Level	±2 V pk maximum operating, ±5 V pk absolute maximum
Carrier Frequency Accuracy	As FM Internal Sine, typical.
Deviation Accuracy [2]	±3 % of setting ±240 mHz/Fr rad, for 1 Vpk input, dc or 200 Hz to 20 kHz rate, deviation >0.01 % Fd/Fr rad. Typical

[1] External phase modulation deviates the phase of the carrier, applying the set deviation sensitivity to the modulation input signal.

[2] See chart showing maximum available equivalent frequency deviation and equivalent maximum frequency deviation for which phase deviation accuracy specifications apply for sinusoidal inputs (ϕd = Fd / Fr). Applies to demodulated signal content at rate frequency fundamental.

Modulation Trigger Output	Rear panel Trigger I/O BNC connector
Level	TTL compatible logic output, selectable as rising or falling edge
Timing Alignment	±500 ns typical, from modulation waveform zero crossing for Sinusoidal or positive peak for Triangle

Frequency Sweep Specifications at Leveling Head Output (96040A and 96270A) and Microwave Output (96270A)

Sweep Frequency Range	96040A and 96270A Leveling Head output: 1 mHz to 4 GHz 96270A Microwave Output: 1 mHz to 27 GHz Sweeps are generated as a sequence of discrete synthesized frequencies
Sweep Modes	Stop - Start and Center - Span Linear or Logarithmic Sawtooth or Triangular Repetitive, Single Shot, Triggered and Manual Sweep Squelch or Non-Squelch at frequency transitions Narrow range-locked sweep [1]
Start, Stop and Step Frequency Setting Resolution	<100 MHz: 0.1 Hz , >100 MHz: 11 digits
Frequency Steps	5 million maximum
Step Size	96040A and 96270A Leveling Head output: 1 mHz to 4 GHz 96270A Microwave Output: 1 mHz to 27 GHz
Step Dwell Time	20 ms (40 ms for 96270A Microwave Output) to 10 s 2 ms to 10 s for narrow range-locked sweep [1]
Sweep Duration	100 hrs maximum, calculated from step dwell x number of steps
Squelch Duration [2]	96040A and 96270A Leveling Head output: <20 ms 96270A Microwave Output: <40 ms
Trigger Input/Sync Output	Rear-panel Trigger I/O BNC connector, selectable as sweep trigger input or sweep sync output
Trigger Input	TTL compatible logic input, selectable as rising or falling trigger to start sweep. Typically ≤1 ms delay from trigger to sweep start.
Sync Output	TTL compatible logic output, selectable as rising or falling sync pulse coincident with sweep start. Typical pulse duration 250 µs. Typical time alignment +15 ms to +18 ms from sweep start when dwell time ≥20 ms, +1 ms when dwell time <20 ms (delay ensures settled signal at the trigger point).

[1] Narrow range-locked sweep provides phase continuous constant amplitude frequency sweep without hardware boundaries when sweep range setting <0.03 % of center frequency and center frequency >15.625 MHz.

[2] When selected, Squelch is active between all frequency transitions. When deselected, Squelch is active only at hardware range boundaries. Squelch is not active in narrow range-locked sweep.

Frequency Counter Specifications

Input	96270A	Rear-panel BNC connector (300 MHz Counter). Input impedance selectable 50 Ω (dc coupled) or 10 kΩ [1] (ac coupled), nominal. AC coupled into 0 V threshold.		
	96040A	Rear-panel BNC connector (50 MHz Counter, Modulation, Leveling and Frequency Pull Input). Input impedance 10 kΩ [1] (ac coupled), nominal. AC coupled into 0 V threshold.		
Frequency Range	96270A	0.9 MHz to 310 MHz for specified accuracy. Functional to 10 Hz, typical		
	96040A	0.9 MHz to 50.1 MHz for specified accuracy. Functional to 10 Hz, typical		
Frequency Bands	96270A Only	0.9 MHz to 50.5 MHz, >50.5 MHz to 310 MHz with 50 Ω selected. 0.9 MHz to 50.5 MHz with 10 kΩ [1] selected.		
Input Level		0.5 V pk-pk minimum operating, ±5 V pk absolute maximum		
Gate Times and Resolutions [2] (in displayed digits)		0.2 s: 7/8 digits, 2 s: 8/9 digits, 20 s: 9/10 digits, 80 s: 10/11 digits		
Accuracy		Gate Time	Internal Frequency Reference	External Frequency Reference
		0.2 s, 2 s, 20 s	±0.05 ppm ±0.5 count	Ext Freq Ref Accuracy ±0.5 count
		80 s	±0.05 ppm ±1.25 counts	Ext Freq Ref Accuracy ±1.25 counts

[1] Higher frequencies into 10 kΩ impedance may require an external 50 Ω termination fitted to the 96040A frequency counter BNC, depending on signal matching, or for 96270A, the 50 Ω input impedance setting may be required.

[2] Frequencies are automatically displayed in units of Hz, kHz or MHz. Number of digits depends on gate time selected and display auto-ranging points, arranged in decades at 1 099 999 9(99 9) / 1 100 000 (000).

Power Meter Readout Specifications (96270A only)

Supported Sensors	Rhode & Schwarz NRP-Z series thermal sensor models 51, 52, 55.03, 55.04, 56, 57 and 58
Sensor Channels	Two front panel mounted mini-ODU connectors, compatible with supported sensor models. User selectable as power meter readout or leveling control sensor feedback [1]
Readout/Measurement Functionality	Single or Dual readout, user selectable as power or equivalent voltage into 50 Ω, with linear or logarithmic units. Source/Measure mode allows simultaneous signal output and single/dual power meter readout operation. Relative ratio or difference mode.[2]
Readout Display	Absolute: In W, Vrms, Vpk-pk, dBm, dBuV Relative: ratio in dB or Δ%, difference in W or V Resolution: 0.001 dBm/dB; W/V/%, 5 digits with autoranging unit multiplier
User-selectable Settings/Actions	Reading averaging, single/continuous triggering, sensor zeroing.

[1] When used as the leveling control sensor for the Microwave Output with the HF Leveling kit or compatible splitter and sensor, the measured power is displayed. Settings are automatically configured for optimal performance.

[2] Absolute/Relative mode independently selectable for each readout channel. Relative measurements between channels is not available.

GPIB Command Emulation Mode Specifications

96270A [1] [2]	HP3335A,HP8662A, HP8663A, HP8340A,HP8360 B-Series, Agilent E8257 Series, 9640A.
96040A [1]	HP3335A, HP8662A, HP8663A, 9640A

[1] Only one instrument emulation mode may be selected at any one time.

[2] Emulation includes models with frequency ranges above 27 GHz. These models are emulated within the frequency capabilities of the 96270A.

Chapter 2
Theory of Operation

Introduction

This chapter provides the theory of operation for the Product. The theory is presented at a high-level and is supported by an overall functional block diagram. Since the Product is supported at the module (board) level, the theory is often a useful troubleshooting tool for isolating faulty PCAs. The assemblies (modules/PCAs) in the theory correspond to the replaceable assemblies described in *Chapter 6, List of Replaceable Parts*.

Overall Functional Description

Refer to the functional block diagrams shown in Figure 2-1 (96040A) and Figure 2-2 (96270A) while reading this description. In addition to identifying all of the assemblies contained in the Product, this diagram provides a functional view of the data flow between the assemblies. When appropriate, simplified schematics also accompany the description. These simplified schematics, Figures 2-3, 2-4, 2-5, and 2-6 are located at the back of this chapter. Assembly interconnections and cable identification is detailed in *Chapter 5, Maintenance*.

The following list identifies the major assemblies that comprise the Product and includes a description of the basic functions each assembly performs:

Synthesizer PCA	Develops frequency for output and voltages for isolated (floating) functions.
RF Output PCA	Divide, filter, amplify, control, and attenuate RF Output.
Digital PCA	Optical isolation and routing of digital control data (IEEE-488 (GPIB) and serial data).
Power Supply PCA	Ground referenced power supplies and driver for Low Voltage Transformer.
Interconnection PCA	Rear-panel accessible connectors and switches for remote communication.
Front Panel Assembly	Front panel user interface (UI) for local operation, includes the Display and the Keypad PCA.
Mains SMPS Assembly	Mains isolation with 40 V dc output driving the Power Supply PCA.

Rear Panel	Provides the mounting location for ports, connectors, and switches needed to externally access and influence the operation of the Instrument.
Leveling Head Assembly	Leveling, control, and attenuation of the RF Output Signal.
27 GHz Control PCA	Controls frequency generation and output level above 4 GHz (96270A).
27 GHz Multiplier PCA	Generates frequencies above 4 GHz (96270A).

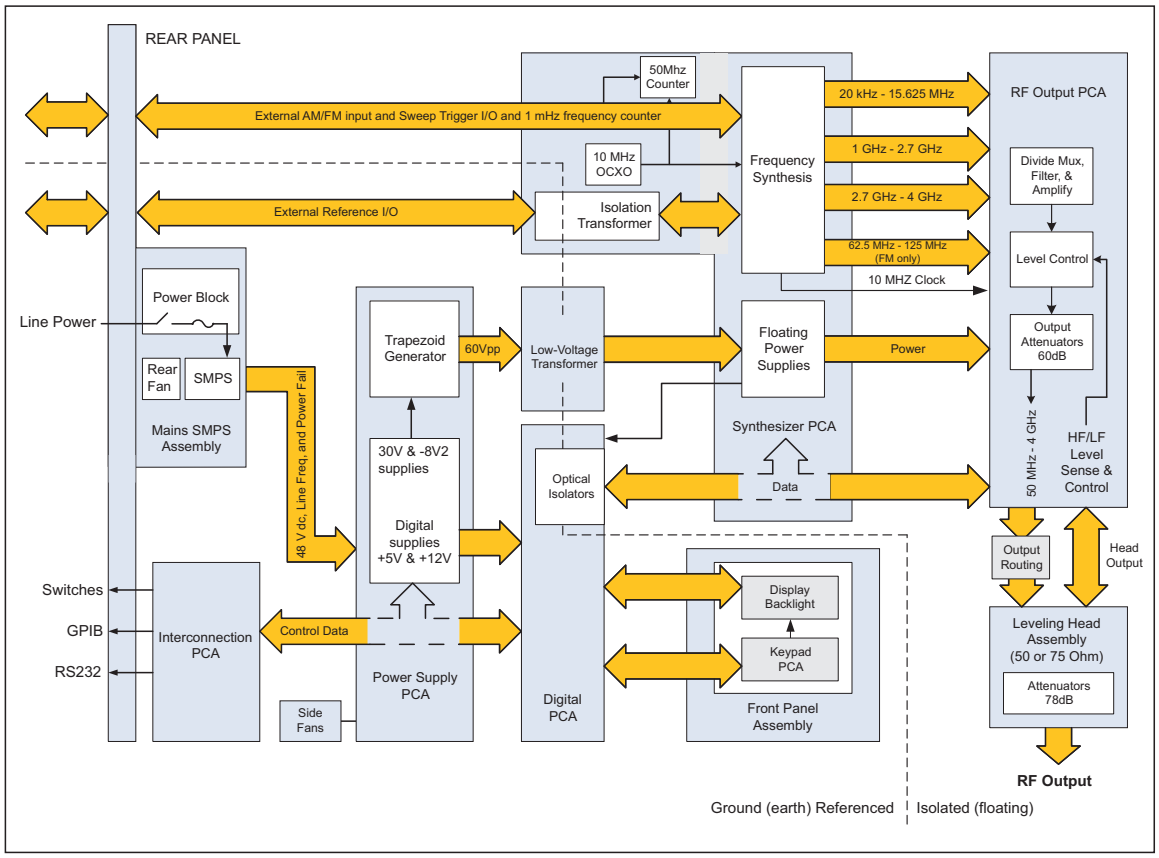

hpn384.eps

Figure 2-1. Overall Functional Block Diagram (96040A)

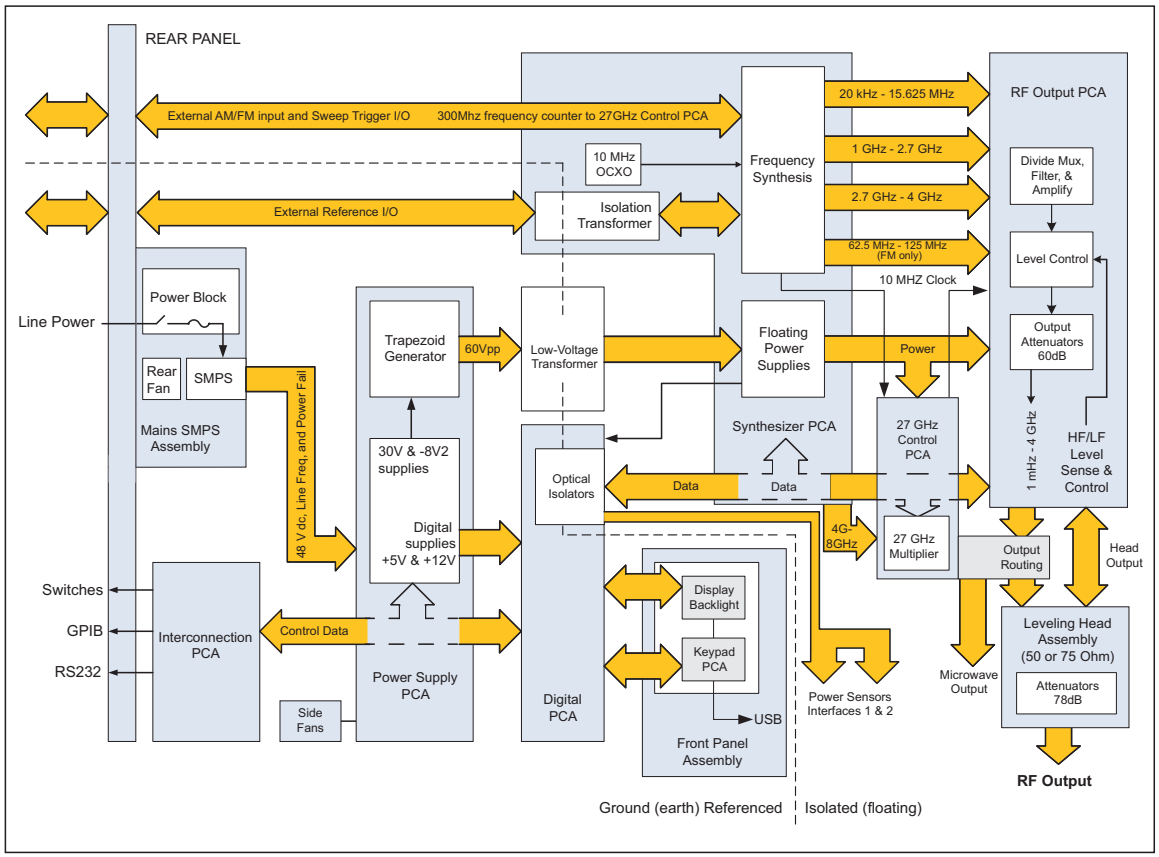

hpn385.eps

Figure 2-2. Overall Functional Block Diagram (96270A)

User Interface

Operator interaction with the Instrument starts at the Front Panel. The Front Panel includes a keypad used to input Instrument configuration and control data, and a display showing RF output signal parameters and instrument status. The keypad switches, display, and USB socket (96270A) are mounted in a plastic Bezel Assembly. The Digital PCA scans the keypad switch matrix and sends display data via a flat flexible ribbon cable. The rear panel GPIB socket provides remote control and is routed through the Interconnection PCA to the Digital PCA via a long ribbon cable. The rear-panel serial port signals, used for firmware updates, and signals from rear switches also go through the Interconnection PCA.

The two power sensor interface connectors (96270A), on the left of the front panel, are routed to controllers on the Digital PCA. Electrically they are connected to the floating RF Common of the instrument, which is isolated from the chassis.

Frequency Synthesis

Primary frequency synthesis takes place within the Synthesizer PCA (Figure 2-3), where a combination of phase lock, frequency translation and direct digital synthesis (DDS) techniques are used to generate signals of appropriate resolution, phase noise and spectral purity. Four main outputs are created, covering the ranges 20 kHz to 9 MHz, 1 GHz to 2.7 GHz, 2.7 GHz to 4 GHz and, for wide deviation FM only, 62.5MHz to 125MHz. To achieve the required frequency accuracy, these outputs are derived from a 10 MHz Oven Controlled Crystal Oscillator (OCXO), but the instrument will also accept an external reference clock source of between 1 MHz and 20 MHz in 1 MHz increments.

The four Synthesizer PCA output signals are fed to the RF Output PCA (Figure 2-4) where additional frequencies are derived: frequencies covering the range 9 MHz to 1 GHz (with the exception of wide deviation FM signals at carrier frequencies below 125 MHz) are derived by applying signals of between 1 GHz and 2 GHz to a binary divider chain, and frequencies spanning the range 1 mHz to 20 kHz are generated by means of a wave table and associated DAC. Frequencies covering the range 1 mHz to 4 GHz are thus available from the RF Output PCA.

In the 96270A, frequencies above 4 GHz are generated on the 27 GHz Multiplier PCA (Figure 2-6), by frequency multiplication of a 4-8 GHz signal from the Synthesizer PCA to produce 4-27 GHz. There are four separate outputs from the 27 GHz Multiplier: 4-8 GHz, 8-12 GHz, 12-18 GHz and 18-27 GHz.

The 27 GHz Multiplier PCA (96270A) plugs into sockets on the 27 GHz Control PCA (96270A), which supplies the required power supply and control signals. The four outputs of the 27 GHz Multiplier connect via semi-rigid cables into a coaxial SP6T switch, which is followed by an optional step attenuator and then routed to the Microwave Output.

The 27 GHz Control PCA also contains the 300 MHz Frequency Counter (96270A), which has 3 user-selectable input modes of operation: 50 MHz (10 kΩ), 50 MHz (50 Ω), and 300 MHz (50 Ω). The input is via a cable from a dedicated BNC on the rear panel that is isolated from RF Common when the 300 MHz Frequency Counter is not in use.

Amplitude Control

Signals from the various sources are amplified, filtered and selected as appropriate to produce a sinusoidal output at the required frequency.

To achieve the necessary dynamic range on the output, up to 138 dB of switched attenuation, comprising 60 dB from coaxial attenuators (Figure 2-6) and 78 dB in the Leveling Head (Figure 2-5), can be applied to the output signal. The 60 dB is derived from three series 20 dB coaxial attenuators selected by a two way coaxial multiplexer mounted on the left of the chassis.

In the 96270A there is another two way coaxial multiplexer (Figure 2-6), mounted on the front bulkhead, that routes outputs below 4 GHz to the 27 GHz Control PCA coaxial SP6T switch, optional step attenuator and then to the Microwave Output. In the 96040A, when this two way multiplexer is not fitted, the coaxial attenuators are connected directly to the Output PCA base leveled output.

For frequencies between 20 kHz and 4 GHz, the output amplitude is controlled by a feedback loop which compares the output level with that of a set value and maintains it by adjusting voltage-controlled attenuator circuits in the forward signal path. At higher output levels all switched attenuation is applied within the Leveling Head, and in this condition the signal level is sensed in the Leveling

Head. Two level detectors are used: a LF Detector (20 kHz < frequencies > 125 MHz) and a HF Detector (125 MHz < frequencies > 4 GHz). For output levels below approximately -60 dBm, the 60 dB attenuator is switched in, and in this condition the level is sensed by LF and HF Detectors on the RF Output PCA prior to attenuation.

Above 4 GHz each of the four output frequency bands of the 27 GHz Multiplier has its own level detector. The detected output level is fed to the 27 GHz Control PCA where it is controlled by comparing with the demand and adjusting the appropriate voltage-variable attenuator on the 27 GHz Multiplier.

In the 96270A, when microwave output sensor/splitter leveling is selected, automatic digital feedback is applied from the power sensor selected as the leveling sensor. The signal level detected by the power sensor is controlled by comparing with the required output amplitude setting and adjusting the demand accordingly.

To offer the greatest noise immunity when connecting the Product to a UUT, the Synthesizer PCA, 27 GHz Control and Multiplier PCAs (96270A) and the RF Output PCA power supplies are isolated from Earth so that the instrument output and associated RF Common are floating.

Frequency Modulation

Frequency modulated outputs are derived from a frequency modulated 100 MHz to 250 MHz carrier signal which is generated on the Synthesizer PCA by a high frequency DDS circuit. The modulating waveform is generated internally in the digital domain, but a dedicated A-D converter is included to allow the instrument to accept an external analogue modulation source.

For output frequencies greater than 125 MHz, a combination of frequency translation and phase lock techniques are used to convert this carrier to frequencies in the range 1 GHz to 4 GHz. This signal is then fed to the RF Output Assembly where carrier frequencies down to 125 MHz are derived by successive binary division. For output frequencies < 125 MHz and deviation values < 0.12 % of the carrier frequency the output is derived by further binary division of this signal.

For output frequencies <125 MHz and deviation values >0.12 % of the carrier frequency the DDS signal is applied directly to the RF Output PCA, where carrier frequencies down to 9 MHz are derived by binary division.

Amplitude Modulation

For carrier frequencies >125 MHz amplitude modulation is achieved by applying a modulation component to the control input signals of the voltage-controlled attenuator circuits used to control carrier amplitude. At these frequencies, feedback from an output envelope detector is used to maintain modulation accuracy and correct for non-linearity in the voltage controlled attenuator circuits. To achieve the required modulation index range in this mode, the signal is also pre-modulated by an additional voltage controlled attenuator stage in each of the three high frequency signal paths.

For carrier frequencies <125 MHz amplitude modulation is achieved by applying the modulating signal to an analogue multiplier which is switched into the carrier signal forward path. In this mode the multiplier is also used to control the output signal level.

The modulating waveform is generated by a 36-bit numerically controlled oscillator (NCO) with a programmable wave table, but a dedicated A-D converter is included to allow the instrument to accept an external analogue modulation source.

Instrument Control

Overall control of instrument functions is provided by the Digital PCA which accepts data from the Front Panel Assembly user interface. The Digital PCA responds by setting control bits on the Synthesizer PCA, RF Output PCA and 27 GHz Control PCA (96270A), via an 8-bit multiplexed address/data bus. Leveling Head control bits are accessed by a serial interface on the RF Output PCA.

The 8-bit multiplexed address/data bus allows the Digital PCA to receive self-test and status data from the Synthesizer PCA, RF Output PCA and 27 GHz Control PCA (96270A). Leveling Head-specific calibration data stored within an EEPROM device in the Leveling Head is accessed by the serial interface on the RF Output PCA. Factory set data is held by EEPROM devices on the Synthesizer PCA, Leveling Head and 27GHz Control PCA (96270A). The Digital PCA also handles external data communication via the GPIB and RS232 ports.

Operating voltages for most of the Digital PCA are derived from the Power Supply PCA and are ground (Earth) referenced. The floating RF Common circuitry is powered via a ribbon connection to the Synthesizer PCA. Optical-isolators on the Digital PCA allow the Synthesizer PCA, RF Output PCA and 27 GHZ Control PCA (96270A) to exchange floating multiplexed address/data with the Digital PCA.

Power Supplies

Line power is fed to the SMPS via a Power Block module, accessed on the rear panel. The SMPS is mounted in the Mains SMPS Assembly with the Power Block module, rear cooling fan & line frequency optical isolation. The isolated line frequency signal & SMPS power fail signal are routed to the Power Supply PCA. The Power Block module has one line voltage setting & one rating for the fuses fitted in L and N.

From the +48 V dc SMPS output, switch mode and linear techniques are used to derive earth-referenced regulated DC outputs which include +5 V dc, -8.2 V dc, +12 V dc, +20 V dc, and +30 V dc.

The +5 V dc supply is used to power the Digital PCA where a +3.3 V dc supply is also derived, both for internal use and to power the Keypad PCA and color display. The +12 V dc supply is routed to the Front Panel Assembly, with the Digital PCA, where it can be switched under firmware control to provide power for the display LED backlight.

The +30 V dc supply feeds a trapezoidal waveform generator, located on the Power Supply PCA, which produces a differential pair of line locked, 60 V peak-to-peak, 200/240Hz, flat-topped waveforms with controlled rise and fall times.

The differential trapezoidal waveform is applied to the primary of the low voltage (LV) transformer. This transformer has three secondary windings whose outputs are rectified, smoothed and regulated on the Synthesizer PCA to produce floating supply outputs of +20 V dc unregulated, -5.2 V dc, +3.3 V dc, +5 V dc, -15 V dc, +2.5 V dc, +9 V dc, +12 V dc, +15 V dc, and +25 V dc from which all functions on the Synthesizer PCA, RF Output PCA, Leveling Head and 27 GHz Control PCA (96270A) are powered. These supplies can be shut down under the command of a signal from the Digital PCA which disables the +30 V dc regulator on the Power Supply PCA.

Line supply voltage input that is too low for the Instrument to operate is detected by the SMPS, processed on the Power Supply PCA to drive a signal that shuts down the Digital PCA until a suitable supply voltage is detected.

The potentiometer at the back right of the Synthesizer PCA should be adjusted to minimize common mode on the floating RF common.

On the Digital PCA the floating RF Common circuitry powering the Power Sensor Interfaces(96270A) has a local +5 V switching regulator supplied by the floating +20 V unregulated supply. In the 96270A the status LEDs adjacent to the Microwave Output & Leveling Head Output Connectors are driven by the Digital PCA. The front USB Interface is controlled by the Digital PCA with signals routed via the ribbon cable and keypad PCA in the Front Panel Assembly.

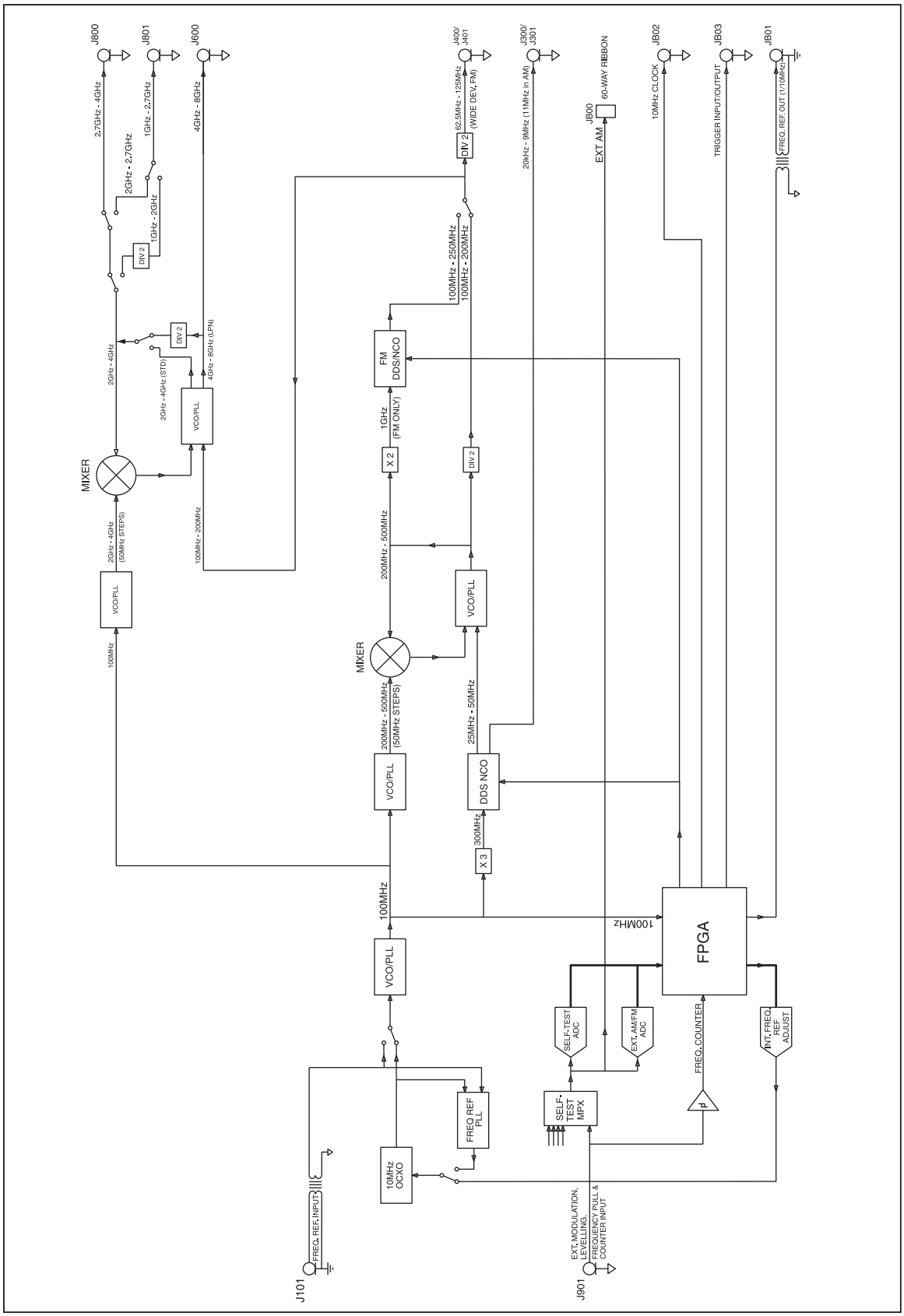

hpn389.eps

Figure 2-3. Synthesizer PCA - Simplified Schematic

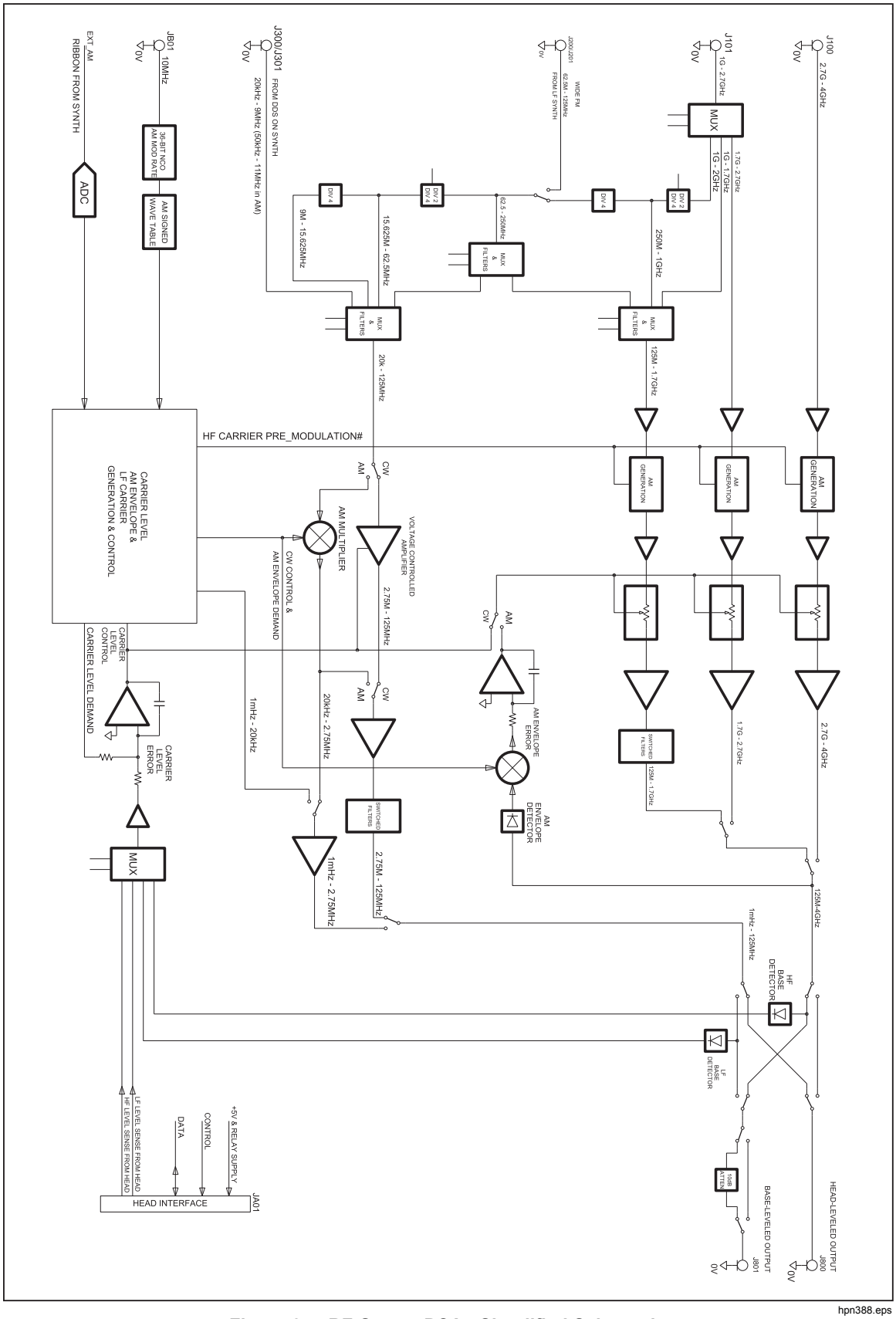

hpn388.eps

Figure 2-4. RF Output PCA - Simplified Schematic

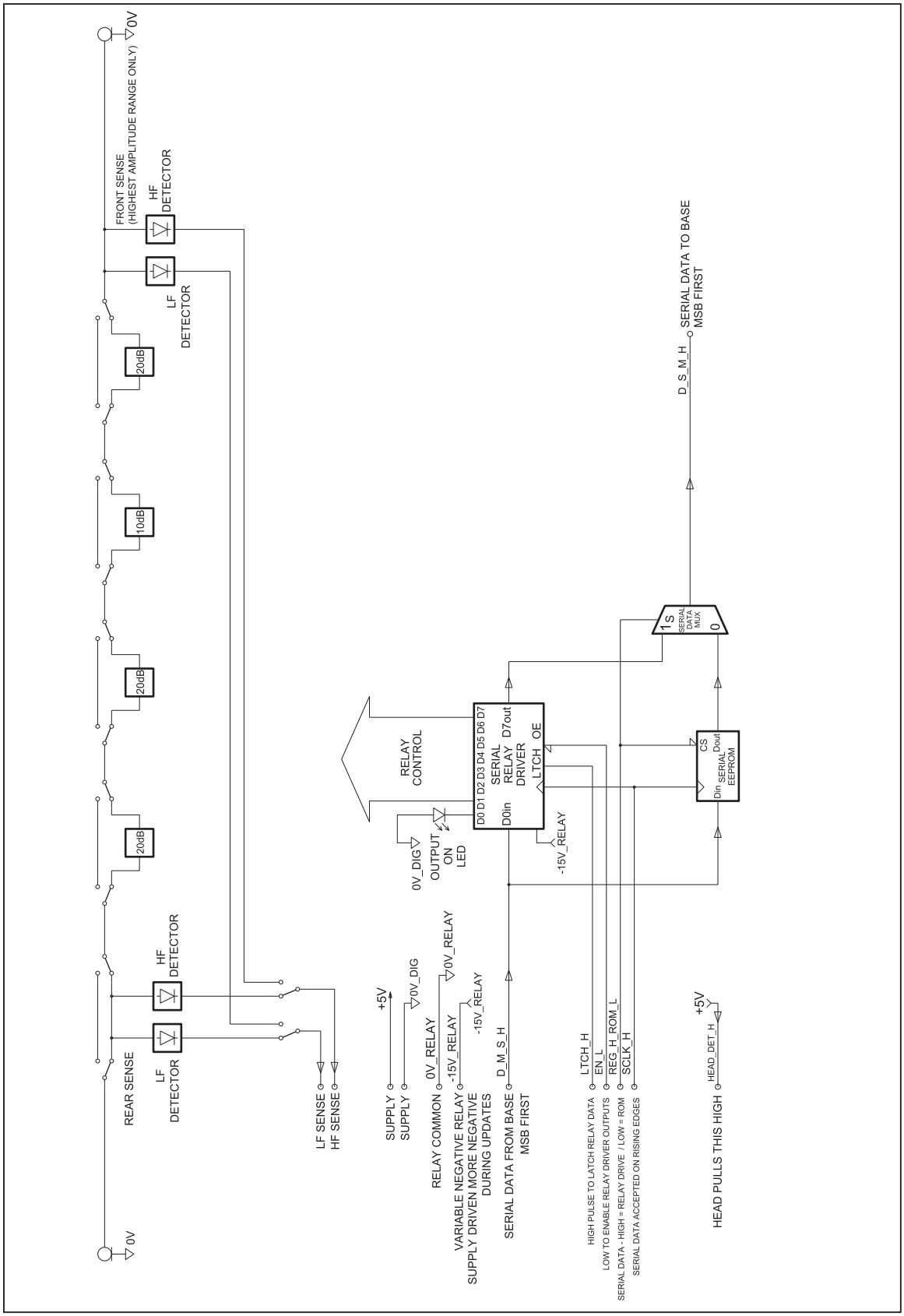

hpn387.eps

Figure 2-5. Leveling Head Assembly - Simplified Block Diagram

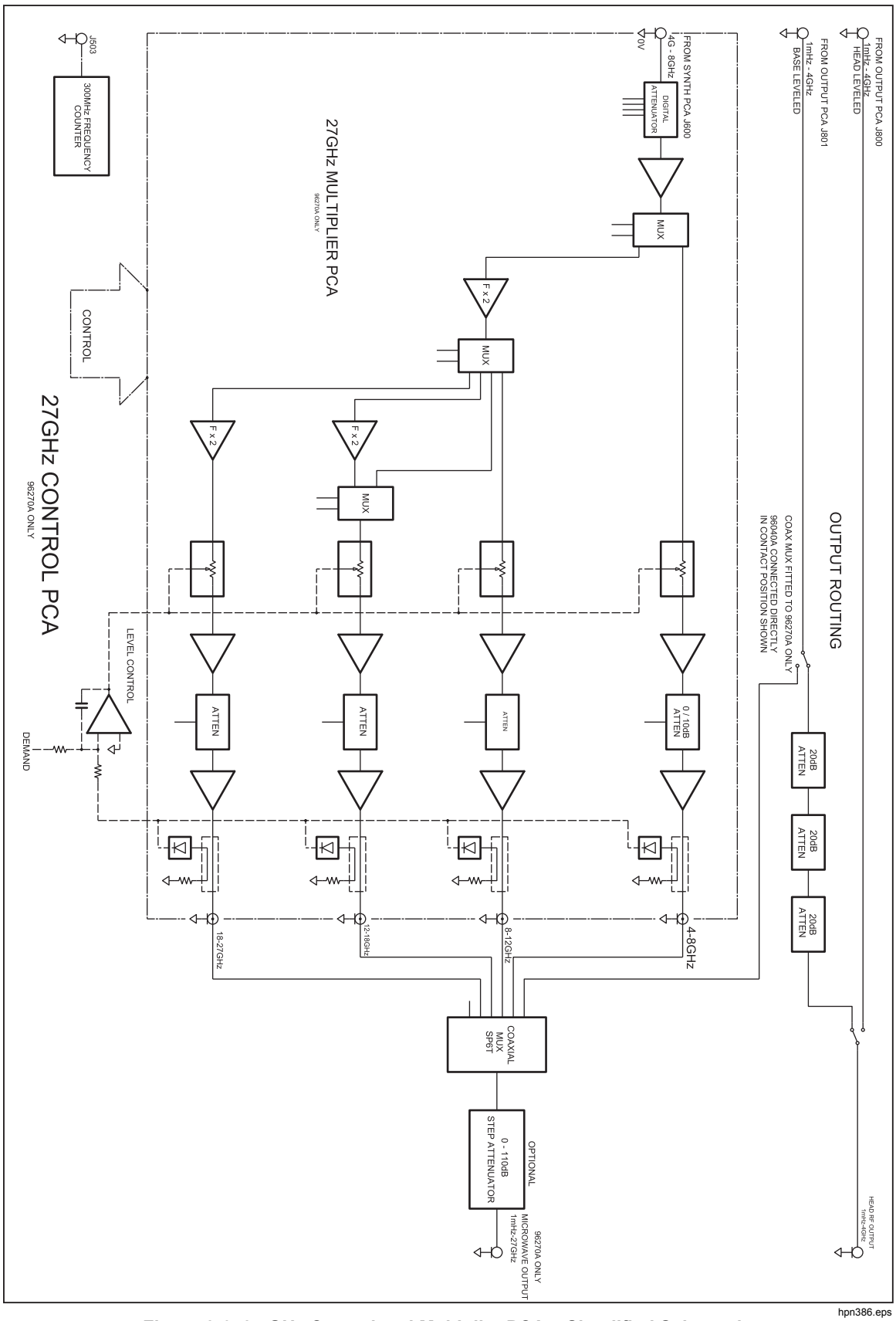

hpn386.eps

Figure 2-6. 27 GHz Control and Multiplier PCA – Simplified Schematic

Chapter 3
Performance Tests

Introduction

⚠⚠Warning

To prevent possible electrical shock, fire, or personal injury:

- **Do not perform the verification tests or calibration procedures described in this manual unless you are qualified to do so. The information provided in this manual is for the use of qualified personnel only.**
- **Restrict the humidity of the operating environment to the level specified for any equipment used that conforms to IEC60950-1 used with the Product.**

Recommended Tools and Equipment

A list of the tools and equipment required to verify and maintain the performance of the Instrument is shown in Table 3-1. If the recommended model is not available, use another model/brand with the same or better specifications.

The Power Meters and associated Power Sensors listed in Table 3-1 automatically apply corrections for the sensor frequency response, linearity, and temperature. However, to achieve best uncertainties it is common practice to use these devices with additional calibration factor correction figures obtained by calibration at a primary laboratory or a national metrology institute, usually measured at a single power level. The diode sensor designs include compensation for inherent non-linearity of the diode amplitude response, but at certain test points these “built-in” corrections alone are not sufficient to achieve the required measurement uncertainty. In addition to the usual frequency response (or “flatness”) calibration factors, corrections must be applied for a frequency dependent linearity characteristic. These could be determined at the time of frequency response calibration, or determined separately by comparison with an inherently linear device such as a thermal Power Sensor.

Table 3-1. Recommended Equipment

Equipment	Recommended Model	Minimum Use Requirement
Frequency Counter	Fluke PM 6690 with 2.7 GHz Input option	Period resolution: 100 ns Frequency resolution: 10 nHz at 10 kHz.
Frequency Standard	Fluke 910R	1 x 10^{-11} frequency uncertainty
Signal Source	Fluke 9640A, 96040A or 96270A	4 GHz; frequency resolution 10 Hz, short term amplitude stability 0.1dB 75 Ω Leveling Head required for testing 75 Ω UUTs.
Measuring Receiver/Spectrum Analyzer	Rohde & Schwarz FSMR26 with option FS-K40	Frequency resolution: 0.1 Hz Frequency Accuracy: ± ½ count of lsd Relative RF Level: ±(0.015 dB ±0.005 dB / 10 dB step) Frequency: 1 kHz to 4 GHz Range: +10 to -130 dBm; 50 Ω; Linearity uncertainty, 0.02 dB; Max. SWR: 1.10; DC coupled; Phase noise measurement capability: -128 dBc/Hz at 10 kHz and 100 kHz offset at 640 MHz
Signal Source Analyzer [1]	Rohde & Schwarz FSUP with option FSUP-B60 or Agilent E5052B	Phase noise sensitivity, without cross-correlation, at 1 GHz: -108 dBc/Hz at 100 Hz, -144 dBc/Hz at 100 kHz, and -165 dBc/Hz at 10 MHz offset Phase noise sensitivity, normal capture range, at 1 GHz: -128 dBc/Hz at 1 kHz, -144 dBc/Hz at 100 kHz, and -170 dBc/Hz at 10 MHz offset
AC Measurement Standard	Fluke 5790A	Accuracy: ± 0.1%, 200 Hz - 100 kHz
Precision Type-N, Female-to-Female Adapter, 50 Ω	Maury Microwave 8828A	VSWR: DC to 4 GHz, ≤ 1.03; Insertion loss characterized: 100 kHz to 4 GHz
Precision Type-N, Female-to-Female Adapter, 75 Ω	Maury Microwave 8882A	VSWR: DC to 2 GHz, ≤ 1.03; Insertion loss characterized, 100 kHz to 2 GHz
50 Ω Type-N Female-to-BNC Male Adapter	Maury Microwave 8821B1	VSWR: DC to 4 GHz, ≤ 1.08
75 Ω Type-N Female-to-BNC Male Adapter	Agilent 1250-1534	VSWR: DC to 3 GHz, ≤ 1.03
50 Ω Directional Bridge	Agilent 86205A	Directivity: 40 dB, 5 MHz to 2 GHz
75 Ω Directional Bridge	Agilent 86207A	Directivity: 40 dB, 5 MHz to 1.3 GHz
Attenuator, 6 dB, 50 Ω, N-Type	Weinschel Model 1-6	Male/female. VSWR: DC to 4 GHz, ≤ 1.15
Attenuator, 6 dB, 50 Ω, 2.92mm [2]	Anritsu Model 41KB-6	Male/female. VSWR: DC to 26.5 GHz, ≤ 1.3
Precision 50 Ω Open/Short Termination	Narda Microwave 231-416	Minimum Reflection Coefficient: 0.99
Precision 75 Ω Open Termination	Maury Microwave 8885B	Minimum Reflection Coefficient: 0.98
Precision 75 Ω Short Termination	Maury Microwave 8884B	DC – 2 GHz
Precision 50 Ω Feedthrough Termination [3]		50 Ω ± 0.2%
Precision 75 Ω Feedthrough Termination [4]		75 Ω ± 0.2%
Impedance Matching Pad, 75 / 50 Ω	Rohde & Schwarz RAZ	75 Ω Type-N (f) – 50 Ω Type-N (m) Frequency range: DC to 2.7 GHz Insertion loss: 1.76 dB VSWR: 0 to 2 GHz, ≤ 1.06; 2 to 2.7 GHz, ≤ 1.2 Flatness: < 0.025 dB, DC – 0.5 GHz
Power Meter	Rohde & Schwarz NRVD	Compatible with power sensors
Power Meter [5]	Rohde & Schwarz NRP2	Compatible with power sensors
Power Sensor, Thermal, 50 Ω	Rohde & Schwarz NRV-Z51 or Rohde & Schwarz NRP-Z51	Type-N Connector Frequency: 100 kHz to 4 GHz Power: +20 to -20 dBm Cal factor uncertainty: ±0.3%; Max. SWR: 1.10; DC coupled

Table 3-1. Recommended Equipment (cont.)

Equipment	Recommended Model	Minimum Use Requirement
Power Sensor, Diode, 50 Ω	Rohde & Schwarz NRV-Z4 or Rohde & Schwarz NRP-Z91	Type-N Connector Frequency: 100 kHz to 4 GHz Power: -10 to -70 dBm Cal factor uncertainty: ±0.3% Max. SWR: 0.1 to 100 MHz: 1.05
Power Sensor, 75 Ω	Rohde & Schwarz NRV-Z3	Type-N Connector Frequency: 1 MHz to 2 GHz Power: +10 to -20 dBm; Cal factor uncertainty: ±0.3%; Max. SWR: 1.15
Power Sensor, Thermal, 27 GHz, 50 Ω [5], [6]	Rohde & Schwarz NRP-Z53	2.92mm Connector Frequency: 100 kHz to 26.5 GHz Power: +20 to -25 dBm Cal factor uncertainty: ±0.04dB Max. SWR: 1.22; DC coupled
Common mode choke [7], if required.	Fluke part number 474908	Approximately 250 µH, see text.

[1] Required only for the optional phase noise test. Refer to the phase noise test section for further details of equipment selection.

[2] Not required for 96040A.

[3] If a 50 Ω Type-N feedthrough termination is unavailable, a Rohde & Schwarz RAD 50 (or equivalent) with a precision 50 Ω Type-N (f) to BNC (m) adapter may be substituted.

[4] If a 75 Ω Type-N feedthrough termination is unavailable, an Agilent 11094B (or equivalent) with a precision 75 Ω Type-N (f) to BNC (m) adapter may be substituted.

[5] Not required for 96040A. When used for the Microwave Output Level Accuracy test an equivalent power sensor and corresponding power meter readout may be substituted. The model NRP-Z55.03 power sensor is supplied as part of the 96000 HF Levelling Kit and 96000SNS Additional Sensor option.

[6] Not required for 96040A. The model NRP-Z55.03 is supplied as part of the 96000 HF Levelling Kit and 96000SNS Additional Sensor option. When used for the optional Microwave Output characterization adjustment only compatible Rhode & Schwarz NRP-Z series power sensors of the appropriate frequency range may be substituted. Refer to chapters 1 and 3 of the 96000 Series Operator's Manual for details of compatible sensors. No other substitutions are possible for this adjustment.

[7] May be required for measurements made with the 5790A. Refer to relevant sections of this chapter and section 4-12 of the 5790A Operator's Manual for further details.

Typical examples of the AC Measurement Standard listed in Table 3-1 may exhibit a slight noise floor-related non-linearity on the lowest (2.2 mV) range which can increase the uncertainty of the tests or adjustments unless a correction is applied. To determine a 2.2 mV range linearity error, compare the range with the linearity of the higher ranges where no significant non-linearity exists.

Fluke Calibration recommends that users familiarize themselves with the procedures documented in this chapter. The procedures indicate when these Power Sensor and AC Measurement Standard characteristics must be taken into account.

Users should also familiarize themselves with the detailed operation of the equipment listed in Table 3-1 by reading the relevant manufacturer's instructions and manuals.

Performance Test

The performance test is a series of tests based on the published 1-year specifications for the Instrument. Environmental and warm up conditions required for performing the performance test are:

- Ambient temperature of the test environment is 23 ±1 °C.
- Warmup time (continuous operation) for the Instrument, with all covers in place, is 1 hour (24 hours for testing the accuracy of the Reference Frequency and Output Frequency).

Each test lists of the equipment required to perform the test and a figure detailing the equipment connections for the test. Do the tests in sequence and ensure that all prior equipment connections have been removed prior to starting a new test. Fluke Calibration recommends that optional tests indicated be performed after repair, but are not essential for routine verification. For some tests, the uncertainty of the recommended equipment is significant and must be taken into account to determine compliance with published specifications. Use the Performance Test Record, provided at the end of this manual, to facilitate the recording of results, and where necessary, account for the uncertainty of the measurement equipment. Fluke Calibration recommends the use of a photocopy of the Performance Test Record pages (see *Appendix A*) to record results as the tests are performed.

⚠ Caution

To prevent damage to the Leveling Head assembly and adapters, make sure the dimensions of the connectors match prior to mating. The center conductor (pin diameter) of 75 Ω connectors differs significantly from those of 50 Ω connectors. Mating a 50 Ω male with a 75 Ω female will DESTROY the female contact, causing costly damage to the Leveling Head assembly as well as the adapters, while mating a 75 Ω male with a 50 Ω female will result in a poor electrical connection.

⚠ Caution

Tighten/loosen all RF Connectors by turning the collar, not the body. Rotating the connector body will damage the center pin, causing costly damage, as well as seriously deteriorating measurement results.

Note

Use extreme care during all connect/disconnect operations of the RF Connectors. Fluke Calibration recommends that a properly set torque wrench be used to secure all RF connections, where possible. For Type-N Connectors, use a torque value of 1 Nm (9 in-lb). For 3.5 mm and 2.92 mm Connectors, use a torque value of 0.45 Nm (4 in-lb).

Reference Frequency Accuracy

Equipment required for this test:

- Frequency Counter
- Frequency Standard

To verify the accuracy of the internal frequency reference:

1. Warm up the UUT (continuous operation) for 24 hours, minimum.
2. Connect the 10 MHz output from the Frequency Standard to the EXT REF IN on the Frequency Counter (rear panel) using a BNC male – male cable assembly. Set the Frequency Counter for external time base reference.
3. Connect the REF FREQUENCY OUTPUT (on rear) from the UUT to the Channel A input on the Frequency Counter using a BNC male – male cable. Set the Frequency Counter input impedance to 50 Ω. See Figure 3-1 for equipment connections.
4. On the UUT, enable the REF FREQUENCY OUTPUT at 10 MHz.
5. Set the Frequency Counter controls for a reliable and repeatable frequency measurement.
6. Let the Frequency Counter to take several readings and settle. The settled counter reading must be from 9.99999950 MHz to 10.00000050 MHz.
7. Set the UUT output to STBY. Disconnect the UUT REF FREQUENCY OUTPUT from the Frequency Counter input.

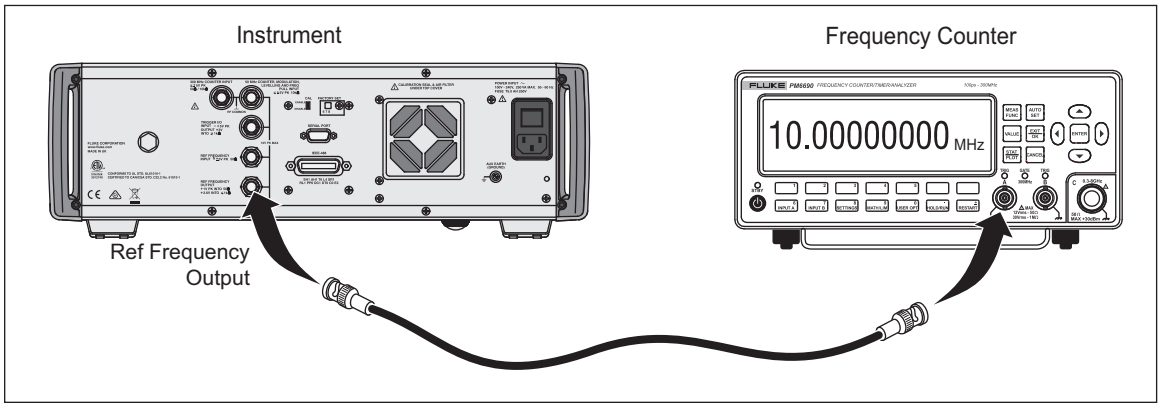

hpn205.eps

Figure 3-1. Equipment Connections - Reference Frequency Accuracy Test

Frequency Accuracy (96040A and 96270A)

Equipment required for this test:

- Frequency Counter
- Spectrum Analyzer
- Frequency Standard
- 50 Ω Leveling Head (supplied with UUT)

To verify the accuracy of the output frequency developed by the UUT:

1. Warm up the UUT (continuous operation) for 24 hours, minimum.
2. Connect the 10 MHz output from the Frequency Standard to the EXT REF IN on the Frequency Counter (rear panel) using a BNC male – male cable assembly. Set the Frequency Counter for external time base reference.
3. Connect the UUT Leveling Head to the Channel A input of the frequency counter. See Figure 3-2 for equipment connections.

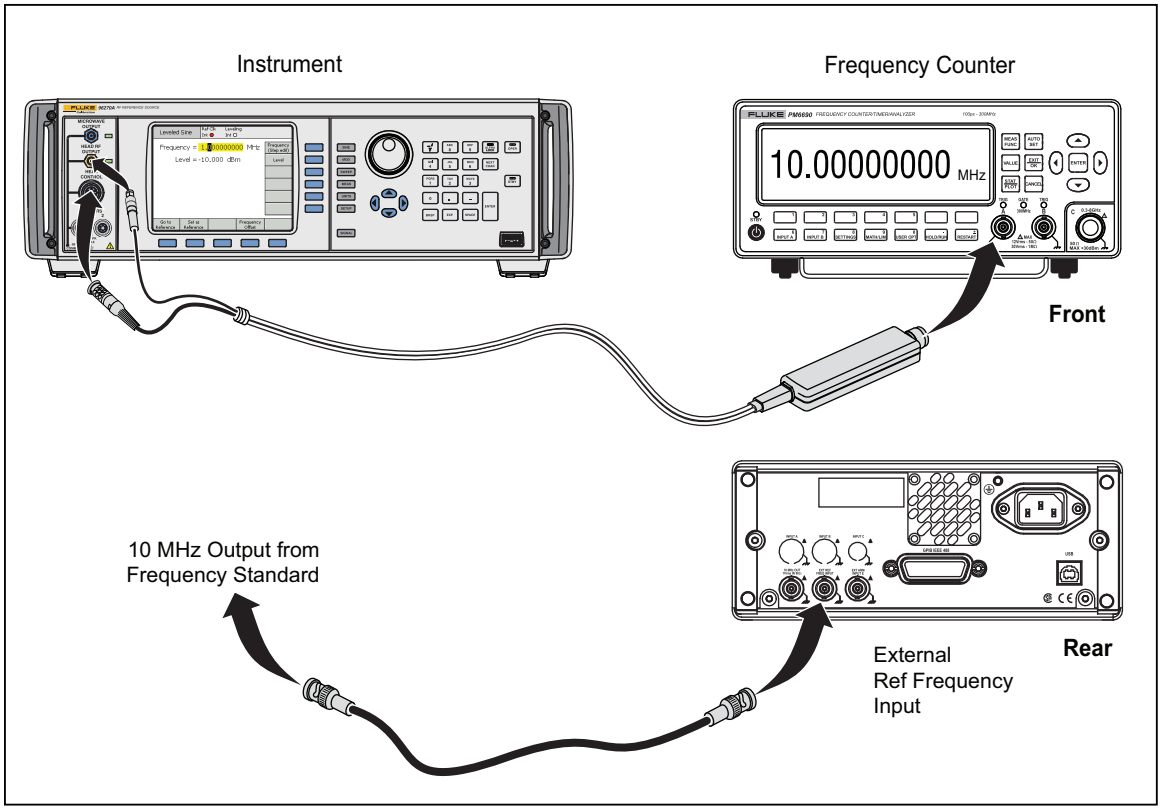

hpn228.eps

Figure 3-2. Equipment Connections - Frequency Accuracy Test

4. Set the UUT as follows:

Ref Frequency Input	Disabled
Mode	Leveled Sine
Signal	Microwave Output
Frequency	10 kHz
Level	+13 dBm
Output	OPER

5. Set the Frequency Counter as follows:

Function	Freq A
Slope	Positive
Coupling	AC
Input Impedance	50 Ω
Attenuation	1x
Trigger Mode	Auto

6. Set the output frequency of the UUT to each of the frequencies listed in Part A of Table 3-2. At each frequency, let the Frequency Counter take several readings and then settle. The settled reading must be within the tolerance shown. For frequencies of ≥500 MHz connect the UUT Leveling Head to the counter channel C input and select the counter Freq C function.
7. Set the UUT output to STBY. Remove all connections to the Frequency Counter.

Table 3-2. Frequency Accuracy Test

Part	UUT Frequency	Tolerance
A	10 kHz	9.999 999 495 – 10.000 000 505 kHz
	10 MHz	9.999 999 500 – 10.000 000 500 MHz
	30 MHz	29.999 998 500 – 30.000 001 500 MHz
	50 MHz	49.999 997 500 – 50.000 002 500 MHz
	100 MHz	99.999 995 000 – 100.000 005 000 MHz
	500 MHz	499.999 980 – 500.000 020 MHz
	1 GHz	0.999 999 950 0 – 1.000 000 050 0 GHz
	2 GHz	1.999 999 900 0 – 2.000 000 100 0 GHz
B	2.7 GHz	2.699 999 865 0 – 2.700 000 135 0 GHz
	4 GHz	3.999 999 800 0 – 4.000 000 200 0 GHz

8. Set the UUT output to STBY. Remove all connections to the Frequency Counter.
9. Connect the 10 MHz output from the Frequency Standard to the EXT REF IN on the Spectrum Analyzer (rear panel) using a BNC male – male cable assembly. Set the Spectrum Analyzer for external frequency reference.
10. Connect the UUT Microwave output to the input of the Spectrum Analyzer. See Figure 3-3 for equipment connections.

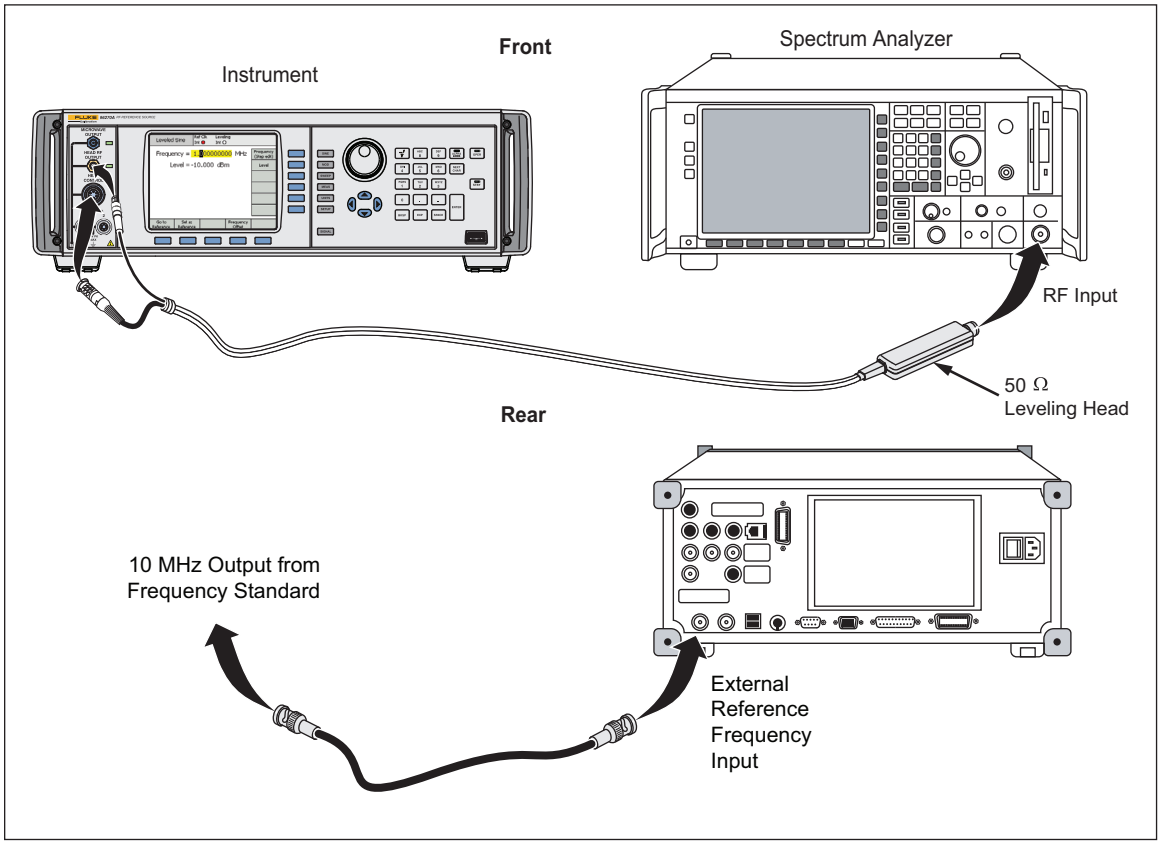

Figure 3-3. Equipment Connections - Frequency Accuracy Test Part B

11. Set the Spectrum Analyzer as follows:

PRESET	
EXT REF	On
COUPLING	DC
REF LVL	+30 dBm
FREQ	5 GHz
SPAN	50 kHz
BW	100 Hz

12. Set the UUT frequency to 2.7 GHz and the output to OPER.
13. On the Spectrum Analyzer push the MKR (marker) key and then select SIGNAL COUNT from the marker menu.
14. On the Spectrum Analyzer, push the NEXT key and select CNT RESOL 0.1 HZ from the counter resolution menu.
15. Allow the Spectrum Analyzer sweep to complete. Do a marker peak search (marker to peak), then allow another sweep to complete to obtain a signal frequency result.
16. Note the spectrum analyzer frequency count result and check that the frequency count value is within the tolerance listed in Table 3-2.

17. Set the UUT output frequency and the Spectrum Analyzer center frequency to the next frequency listed in part B of Table 3-2.
18. Repeat steps 15 to 17.
19. Set the UUT output to STBY. Remove all connections.

Harmonics and Spurious Signal Content - Levelling Head (96040A and 96270A)

Equipment required for this test:

- Spectrum Analyzer
- 50 Ω Leveling Head (supplied with UUT)

To verify the harmonic and spurious signal content of the UUT output with the Leveling Head output:

Note

For the 96270A, additional tests are done on the Microwave Output, as described in subsequent parts of this procedure.

1. Connect the output of the 50 Ω Leveling Head to the RF INPUT of the Spectrum Analyzer.
2. Connect the REF FREQUENCY OUTPUT (rear panel) from the UUT to the Spectrum Analyzer Ext Ref In (on rear). See Figure 3-7 for equipment connections.
3. On the UUT enable the REF FREQUENCY OUTPUT at 10 MHz.
4. Set the Spectrum Analyzer as follows:

PRESET	
EXT REF	On
COUPLING	DC
REF LVL	+30 dBm
FREQ	20 kHz
SPAN	100 Hz

Note

Take care to ensure that signals applied to the Spectrum Analyzer do not exceed its input mixer's optimum operating level, causing false harmonic signal levels to be measured. If necessary, readjust the Analyzer's RF attenuation to achieve the proper mixer input level.

5. Set the UUT as follows:

Note

For the 96270A, ensure the Leveling Head output is selected.

Mode	Leveled Sine
Frequency	20 kHz
Level	+24 dBm
Output	OPER

6. On the Spectrum Analyzer, push MARKER → PEAK.
7. Set the Spectrum Analyzer as follows:

FREQ 40 kHz (2nd harmonic)

8. Using the Spectrum Analyzer delta marker functions, measure the amplitude on the Spectrum Analyzer for the UUT's 2nd harmonic relative to the fundamental. The (delta marker) value shown must be within the tolerance listed in Table 3-3 for 2nd harmonic.

Note

If Signal content at the required harmonic frequency is well below the tolerance limit, it can be difficult to observe on the Analyzer display with the above settings. Provided the harmonic signal is below the allowed limit the test result can be recorded as "Pass". However, to measure the actual signal level, reduce the Analyzer resolution bandwidth setting and/or reduce the Analyzer reference level setting. Remember to restore the Analyzer reference level setting to that shown in step 4 before changing the UUT to the next fundamental output frequency, otherwise the Analyzer may be overloaded and invalid results obtained.

9. Set the Spectrum Analyzer as follows:

   FREQ 60 kHz (3rd harmonic)

   MARKER → PEAK

10. Using the Spectrum Analyzer marker functions, measure the marker amplitude on the Spectrum Analyzer for the UUT's 3rd harmonic. The (delta marker) value shown must be within the tolerance listed in Table 3-3 for 3rd harmonic.

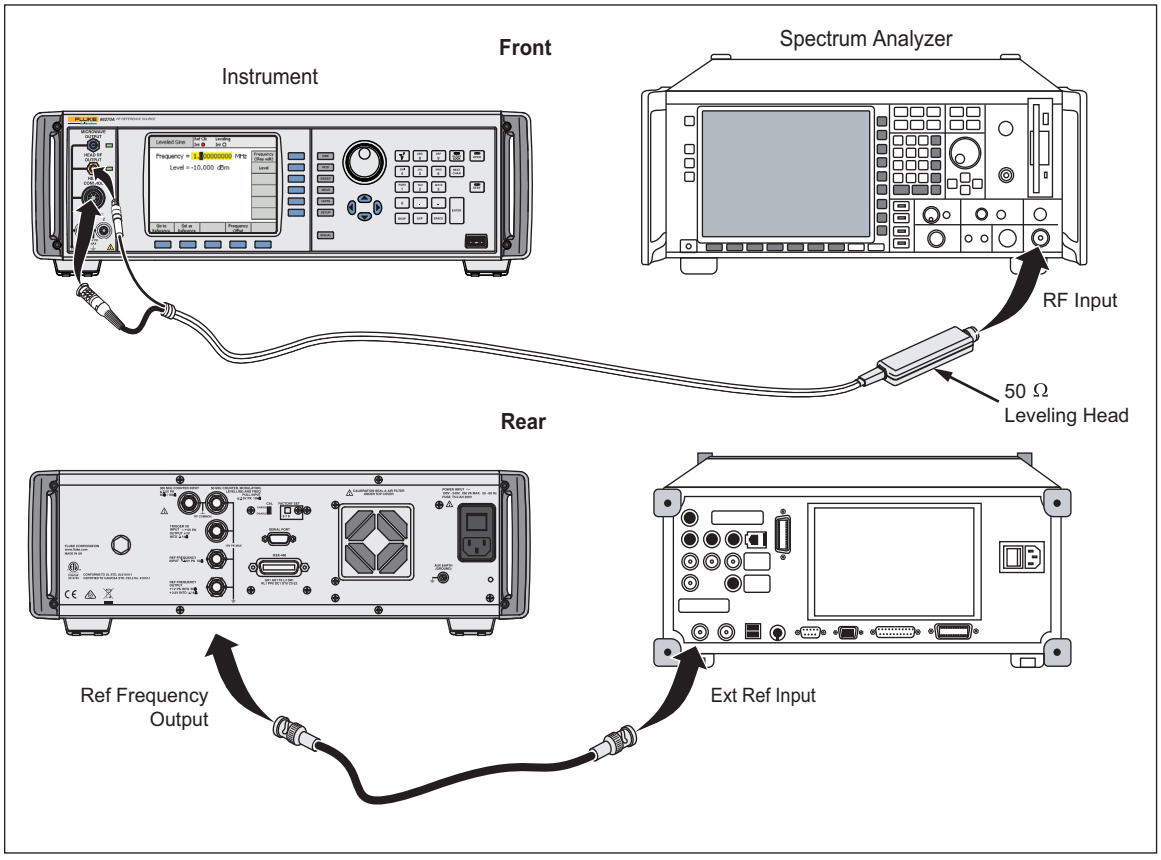

hpn207.eps

Figure 3-4. Equipment Connections - Harmonics and Spurious Content Test

11. Repeat steps 5 through 10 for all frequencies in Table 3-3, using the settings and tolerances shown for each. For UUT output frequency settings of 1.8 GHz and above where the UUT level setting is +14 dBm, set the Analyzer reference level to +20 dBm.

Table 3-3. Harmonics Test

Level	Frequency	2nd Harmonic	Tolerance	3rd Harmonic	Tolerance
+24 dBm	20 kHz	40 kHz	-60 dBc	60 kHz	-60 dBc
	2.74 MHz	5.48 MHz	-60 dBc	8.22 MHz	-60 dBc
	5.5 MHz	11 MHz	-60 dBc	16.5 MHz	-60 dBc
	11 MHz	22 MHz	-60 dBc	33 MHz	-60 dBc
	22 MHz	44 MHz	-60 dBc	66 MHz	-60 dBc
	44 MHz	88 MHz	-60 dBc	132 MHz	-60 dBc
	62.5 MHz	125 MHz	-60dBc	187.5 MHz	-60dBc
	88 MHz	176 MHz	-60 dBc	264 MHz	-60 dBc
	125 MHz	250 MHz	-60 dBc	375 MHz	-60 dBc
+20 dBm	250 MHz	500 MHz	-60 dBc	750 MHz	-60 dBc
	354 MHz	708 MHz	-60 dBc	1.062 GHz	-60 dBc
	500 MHz	1 GHz	-60 dBc	1.5 GHz	-60 dBc
	714 MHz	1.428 GHz	-60 dBc	2.142 GHz	-60 dBc
	1 GHz	2 GHz	-60 dBc	3 GHz	-60 dBc
	1.4 GHz	2.8 GHz	-55 dBc	4.2 GHz	-55 dBc
+14 dBm	1.8 GHz	3.6 GHz	-55 dBc	5.4 GHz	-55 dBc
	2.7 GHz	5.4 GHz	-55 dBc	8.1 GHz	-55 dBc
	4.024 GHz	8.048 GHz	-55 dBc	12.072 GHz	-55 dBc

12. Set the Spectrum Analyzer as follows:

PRESET	
COUPLING	DC
REF LVL	+10 dBm
EXT REF	On
FREQ	2.150 003 GHz
SPAN	2 MHz

13. Set the UUT as follows:

Mode	Leveled Sine
Frequency	2.150 003 GHz
Level	+4.6 dBm
Output	OPER

14. Set the Spectrum Analyzer to single sweep, initiate a sweep and wait for the sweep to complete. Push MARKER → PEAK.

15. Using the Spectrum Analyzer marker delta functions, measure the amplitude of any spurious signals detected. Verify any spurious signals at offsets >±3 kHz from the output frequency within the listed tolerances.

16. Set the output frequency of the UUT and the Spectrum Analyzer center frequency to each of the frequencies listed in Table 3-4, repeating steps 14 through 15.
17. Set the UUT output to STBY.

Table 3-4. Spurious Content Test

Output Frequency	Limit
2.150 003 GHz	< -66 dBc
2.275 003 GHz	< -66 dBc
2.425 003 GHz	< -66 dBc
2.500 003 GHz	< -66 dBc
2.650 003 GHz	< -66 dBc
2.825 003 GHz	< -66 dBc
2.999 997 GHz	< -66 dBc
3.149 997 GHz	< -66 dBc
3.424 997 GHz	< -66 dBc
3.499 997 GHz	< -66 dBc
3.649 997 GHz	< -66 dBc
3.774 997 GHz	< -66 dBc
3.924 997 GHz	< -66 dBc
3.999 997 GHz	< -66 dBc

This completes the 96040A harmonics and spurious test points. Additional test points are required for the 96270A as described in a subsequent procedure. For the 96040A, leave the connections intact for use in the following tests, if desired.

Phase Noise Test (96040A and 96270A, Optional)

Equipment Required for this Test:

- Signal Source Analyzer
- 50 Ω Leveling Head (supplied with UUT)

Note

This procedure measures at offset frequencies below 1 kHz where the Signal Source Analyzer models listed in Table 3-1 have only "Typical" and not guaranteed specification. This should be considered if any apparent out-of-tolerance results are obtained.

Note

The procedure described below refers to menu selections and settings for the R&S FSUP Signal Source Analyzer. If using the alternative Agilent E5052B Signal Source Analyzer, follow the procedure steps as detailed and substitute settings and menu selections appropriate to the E5052B to obtain equivalent measurement conditions.

To verify the UUT phase noise performance using a Signal Source Analyzer:

1. Connect the output of the 50 Ω Leveling Head to the RF INPUT of the Signal Source Analyzer.

   Note

   Do not connect the UUT and Signal Source Analyzer frequency reference inputs and outputs. Each instrument must be operating independently from its own internal frequency reference for this test.

2. Push the SSA softkey, followed by the PRESET key to set the Signal Source Analyzer into its phase noise measurement mode.
3. On the Signal Source Analyzer:
   a. Push the Settings softkey followed by the General Settings menu key.
   b. Set the offset frequency range for phase noise measurement by pushing the Display Settings softkey, and then, set the X-Axis start to 1 Hz and the X-Axis stop to 10 MHz.
   c. Push the Settings softkey again, followed by the Spurs Settings menu key.
   d. Push the HIGHLIGHT SPURS menu key to cancel the spurs highlight display.
4. Set the UUT as follows:

   Note

   For the 96270A, ensure the Leveling Head output is selected.

Mode	Leveled Sine
Frequency	1 GHz
Level	+13 dBm
Output	OPER

5. On the Signal Source Analyzer, push the Premeas softkey to initiate a pre-measurement. This lets the Analyzer automatically tune to the input and select the appropriate measurement configuration.
6. When the pre-measurement is complete, push the Run softkey to make the phase noise measurement.

   Note

   The Signal Source Analyzer will default to using a cross-correlation measurement, thus, providing the optimum phase noise measurement.

7. Push MARKER on the Signal Source Analyzer to place the marker at the lowest offset frequency of 1 Hz.
8. Observing the marker data on the display of the Signal Source Analyzer, verify the phase noise at a 1 Hz offset is within the limit shown in Table 3-5.

   Note

   As the Signal Source Analyzer models listed in Table 3-5 have only "typical" and not guaranteed specifications at offset frequencies below 1 kHz the test tolerances or starting offset frequency may have to be adjusted accordingly.

9. Push the up (⇑) and down (⇓) keys on the Signal Source Analyzer to move the marker across the phase-noise plot on the display to each of the offset frequencies listed in Table 3-5. At each offset frequency, observe the marker data on the display of the Signal Source Analyzer and verify the phase noise is within the limit shown in Table 3-5.
10. Set the UUT output to STBY. Remove all connections to the Leveling Head.

Table 3-5. Phase Noise Test (96040A and 96270A)

Output Frequency	Offset	Specification
125 MHz	100 Hz	< -121 dBc/Hz
	1 kHz	< -141 dBc/Hz
	10 kHz	< -148 dBc/Hz
	100 kHz	< -151 dBc/Hz
	1 MHz	< -153 dBc/Hz
	10 MHz	< -155 dBc/Hz
1 GHz	100 Hz	< -104 dBc/Hz
	1 kHz	< -130 dBc/Hz
	10 kHz	< -140 dBc/Hz
	100 kHz	< -141 dBc/Hz
	1 MHz	< -148 dBc/Hz
	10 MHz	< -152 dBc/Hz

Modulation Test-Leveling Head (96040A and 96270A, Optional)

Equipment required for this test:

- Spectrum Analyzer/Measuring Receiver
- 50 Ω Leveling Head (supplied with UUT)

To verify the amplitude and frequency modulated outputs of the UUT:

Note

Verification of phase modulation is not required as phase modulation is created as sinusoidal frequency modulation with peak deviation derived from the phase deviation and rate settings.

1. Connect the output of the 50 Ω Leveling Head to the RF INPUT of the Measuring Receiver.
2. On the Spectrum Analyzer/Measuring Receiver push PRESET and then select Measuring Receiver Mode.

Note

It may be necessary to readjust the Measuring Receiver's settings from those automatically configured in the modulation measurement mode. In particular, to ensure the demodulation bandwidth and measurement time settings are adequate to accommodate the modulated signal RF spectrum and to capture at least five cycles of the modulation waveform.

3. On the UUT, push [MOD], followed by the Modulation Select softkey and ensure amplitude modulation (AM) is selected. Set the UUT as follows:

Note

For the 96270A, ensure the Leveling Head output is selected.

Frequency	30 MHz
Level	+10 dBm
Mod Rate	20 kHz (Sine)
AM Depth	50 %
Output	OPER
Modulation	ON

4. Use the Measuring Receiver autotune feature to tune to the input signal and measure the AM rate. Verify that the measured rate is within the tolerance listed in Table 3-6.

5. Set the UUT modulation rate to 100 kHz and repeat step 4.

Table 3-6. AM Rate Test – Leveling Head (96040A and 96270A)

Level	Frequency	Modulation Rate	Depth	Tolerance
+10 dBm	30 MHz	20 kHz	50 %	19.999 0 kHz to 20.001 0 kHz
		100 kHz	50 %	99.99 0 kHZ to 100.01 0 kHz

6. Set the UUT as follows:

Frequency	125 MHz
Level	+14 dBm
Mod Rate	1 kHz (Sine)
AM Depth	90 %
Output	OPER
Modulation	ON

7. Use the Measuring Receiver autotune feature to tune to the input signal and measure the AM depth. Verify that the measured depth is within the tolerance listed in Table 3-7.

8. Repeat step 7 for the remaining AM depth test points listed in Table 3-7.

Table 3-7. AM Depth Test – Leveling Head (96040A and 96270A)

Level	Frequency	Modulation Rate	Depth	Tolerance
+14 dBm	125 MHz	1 kHz	90 %	87.2 % to 92.8 %
		100 kHz	90 %	87.2 % to 92.8 %
	1 GHz	1 kHz	90 %	87.2 % to 92.8 %
		20 kHz	90 %	87.2 % to 92.8 %

9. On the UUT, push the Modulation Select softkey and select frequency modulation (FM). Set the UUT as follows:

Frequency	62.5 MHz
Level	+13 dBm
Mod Rate	1 kHz (Sine)
FM Deviation	300 kHz
Output	OPER
Modulation	OFF

10. Use the Measuring Receiver autotune feature to tune to the input signal and when tuning is complete set the UUT to Modulation ON.

11. Measure the FM rate. Verify that the measured rate is within the tolerance listed in Table 3-8.

Note

For accurate FM measurements, the Measuring Receiver's setting demodulation bandwidth setting must be >3 x {rate + deviation}. To meet this requirement at higher rate and deviation frequencies the demodulation bandwidth setting must be increased from the default automatically configured in the modulation measurement mode.

Table 3-8. FM Rate Test – Levelling Head (96040A and 96270A)

Level	Frequency	Modulation Rate	Deviation	Tolerance
+13 dBm	62.5 MHz	400 Hz	30 kHz	±0.11 Hz
	62.5 MHz	300 kHz	1 MHz	±10 Hz

12. Set the UUT as follows:

Frequency	125 MHz
Level	+13 dBm
Mod Rate	1 kHz (Sine)
FM Deviation	1 kHz
Output	OPER
Modulation	OFF

13. Use the Measuring Receiver autotune feature to tune to the input signal and when tuning is complete set the UUT to Modulation ON.

14. Measure the FM deviation. Verify that the measured deviation is within the tolerance listed in Table 3-9.

15. Repeat step 14 for the remaining FM deviation test points listed in Table 3-9. When setting a new carrier frequency, select MODULATION OFF and repeat step 13 prior to repeating step 14.

16. Set the UUT output to STBY. Remove all connections to the Leveling Head.

Table 3-9. FM Deviation Test – Leveling Head (96040A and 96270A

Level	Frequency	Modulation Rate	Deviation	Tolerance
+13 dBm	125 MHz	400 Hz	10 kHz	99.70 kHz to 100.30 kHz
		100 kHz	10 kHz	99.70 kHz to 100.30 kHz
		400 Hz	300 kHz	309.0 kHz to 291.0 kHz
		100 kHz	300 kHz	309.0 kHz to 291.0 kHz
	1 GHz	400 Hz	1 MHz	1.030 MHz to 0.970 MHz
		300 kHz	1 MHz	1.030 MHz to 0.970 MHz

Frequency Counter Accuracy (96040A and 96270A)

Note

This procedure tests the accuracy of the Frequency Counter feature. Since the Frequency Counter accuracy is defined by the accuracy of the product frequency reference, verified in the Frequency Reference Accuracy test, a simpler alternative functional test of the counter feature is also described. This alternative test requires no additional equipment.

Equipment required:

- Frequency Standard

To verify the accuracy of the optional Frequency Counter feature:

1. Warm up the UUT (continuous operation) for 24 hours, minimum.
   - For the 96040A, connect the 10 MHz output from the Frequency Standard to the UUT rear panel 50 MHz Counter, Modulation, Leveling, and Frequency Pull BNC connector using a BNC male – male cable assembly.
   - For the 96270A connect the 10 MHz output from the Frequency Standard to the UUT rear panel 300 MHz Counter BNC connector using a BNC male – male cable assembly.
2. On the UUT, push MEAS to select the Frequency Counter function, followed by the Frequency Counter softkey.
3. Select the 80 s Gate Time and wait until a valid reading is shown. (If required, a reading can be triggered by pushing the Reading Mode, followed by Single Shot, and then Take Reading softkeys).
4. Check that the reading is between 10.000 000 051 MHz and 9.999 999 949 MHz.

For the alternative Frequency Counter feature functional test:

- For the 96040A, connect the UUT rear panel REF FREQUENCY OUTPUT to the 50 MHz Counter, Modulation, Leveling, and Frequency Pull BNC connector using a BNC male – male cable assembly and enable the REF FREQUENCY OUTPUT at 10 MHz.
- For the 96270A connect the UUT rear panel REF FREQUENCY OUTPUT to the 300 MHz Counter BNC connector using a BNC male – male cable

assembly and enable the REF FREQUENCY OUTPUT at 10 MHz. On the UUT, push SINE to select the Frequency Counter function, followed by the Frequency Counter softkey.

1. Select the 80 s Gate Time and wait until a valid reading is shown. (If required, a reading can be triggered by pushing the Reading Mode, followed by Single Shot, and then Take Reading softkeys).
2. Check that the reading is between 10.000 000 001 MHz and 9.999 999 999 MHz.

Note

To minimize Leveling Head interchange, the following tests are divided into 50 Ω and 75 Ω sections.

Level Accuracy – 50 Ω Leveling Head (96040A and 96270A)

Equipment required for this test:

- AC Measurement Standard
- Precision 50 Ω feedthrough termination
- 50 Ω Type-N female-to-BNC male adapter
- Power Meter
- Power Sensor, Thermal, 50 Ω
- Power Sensor, Diode, 50 Ω
- Precision Adapter, Type-N female-to-female, 50 Ω
- Spectrum Analyzer
- 50 Ω Leveling Head (supplied with UUT)

Use the following procedure to verify the absolute level accuracy of the UUT 50 Ω output. The procedure uses an AC Measurement Standard, followed by a Power Meter and sensors, and finally, a Spectrum Analyzer/Measuring Receiver. At various points within the process values previously measured using one reference device are required for subsequent use with another device. To aid readability, the procedure is divided into stages. The complete procedure must be performed in the sequence described. It is recommended that users familiarize themselves with the entire absolute level accuracy verification procedure before commencing.

Note

Unwanted interference from signals at 10 MHz due to the frequency reference outputs of equipment operating in the vicinity of the test setup or the equipment used during the tests can cause erroneous results. To avoid such problems, when test frequencies are from 10 MHz to 300 MHz, add a small offset (50 kHz) to the nominal frequency if the test frequency is a multiple of 10 MHz.

Low Frequency Test Points (steps 1-7)

1. Connect the 50 Ω Leveling Head to the INPUT 1 connector on the AC Measurement Standard using a precision 50 Ω feedthrough termination. (If a Type-N feedthrough termination is not available, use a BNC 50 Ω feedthrough termination and appropriate adapters. Ensure that BNC connector contact resistance and repeatability does not significantly degrade measurement uncertainty). Select INPUT 1. See Figure 3-5 for equipment connections.

Note

Use a common mode choke to obtain satisfactory noise performance and accurate readings. Insert the common mode choke in series between the feedthrough termination and the AC Measurement Standard input, with the ground applied at the choke input. Keep the ground connection as short as possible and set the AC Measurement Standard to Internal Guard. A common mode choke of 250 µH is usually effective. A suitable choke is 6 turns of small-diameter coaxial cable through a TDK toroid, manufacturer's part no. H5C2-T28-13-16 (available as Fluke part no. 474908) Refer to the 5970A Operator Manual for additional explanation.

Note

Measurements made on the 5790A 2.2 mV range (at levels below -40 dBm) require correction for the 2.2 mV range linearity error.

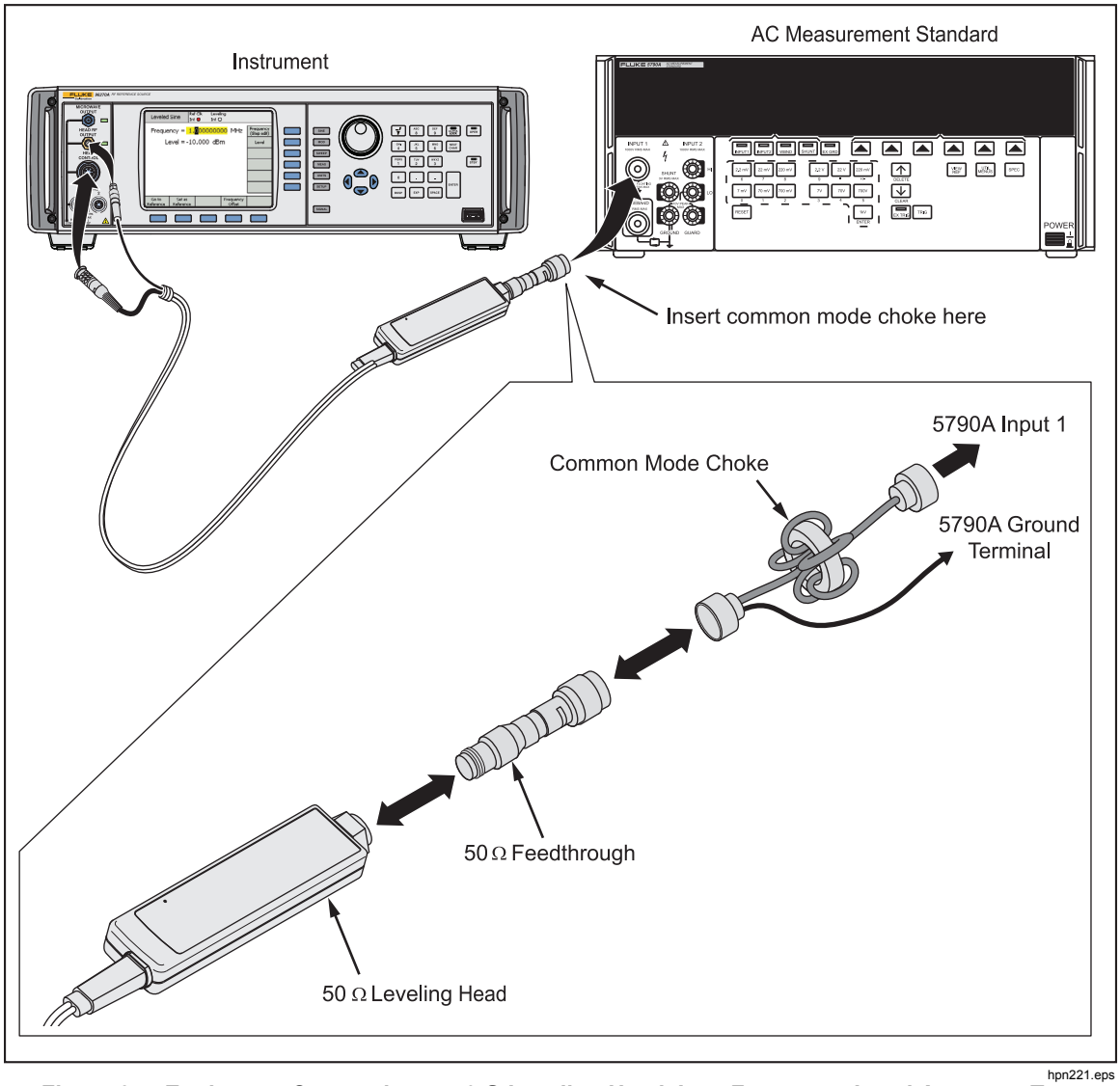

hpn221.eps

Figure 3-5. Equipment Connections - 50 Ω Leveling Head, Low Frequency Level Accuracy Test Points (96040A and 96720A)

2. Set the UUT as follows:

Note

For the 96270A, ensure the Leveling Head output is selected.

Mode	Leveled Sine
Frequency	1 kHz
Level	+16 dBm
Output	OPER

3. Allow the AC Measurement Standard to make several measurements and the reading to settle. Convert the settled reading from V rms to dBm using this formula:

$$\text{dBm (50 }\Omega) = 10Log_{10}\left(\frac{V^2}{50\times 0.001}\right)$$

The result must be within the tolerance listed in Table 3-10.

4. Set the UUT output to the next frequency listed in Table 3-10 for this test amplitude.
5. Repeat step 3 and confirm that the measured output level is within the tolerance shown in Table 3-10.
6. When the test frequency is 100 kHz, record the measured level in dBm as P_1 for use later in this procedure.
7. Repeat steps 2 through 7 for the next test amplitude listed in Table 3-10, applying the 5790A 2.2 mV range linearity error correction at levels below -40 dBm .

High Frequency Test Points (steps 8-27)

8. Connect the 50 Ω Leveling Head to the 50 Ω thermal Power Sensor via a precision 50 Ω Type-N female-to-female adapter. See Figure 3-6 for equipment connections.
9. Set the UUT as follows:

Mode	Leveled Sine
Frequency	100 kHz
Level	+16 dBm
Output	OPER

Table 3-10. 50 Ω Leveling Head, Low Frequency Level Accuracy Test Points

Amplitude	Frequency	Tolerance
+16 dBm	1 kHz	±0.03 dB
	20 kHz	
	100 kHz (P_1)	
+13 dBm	1 kHz	
	20 kHz	
	100 kHz (P_1)	
+3 dBm	1 kHz	
	20 kHz	
	100 kHz (P_1)	
-7 dBm	1 kHz	
	20 kHz	
	100 kHz (P_1)	
-17 dBm	1 kHz	
	20 kHz	
	100 kHz	
-27 dBm	1 kHz	
	20 kHz	
	100 kHz (P_1)	
-37 dBm	1 kHz	
	20 kHz	
	100 kHz (P_1)	
-47 dBm	1 kHz	
	20 kHz	
	100 kHz (P_1)	

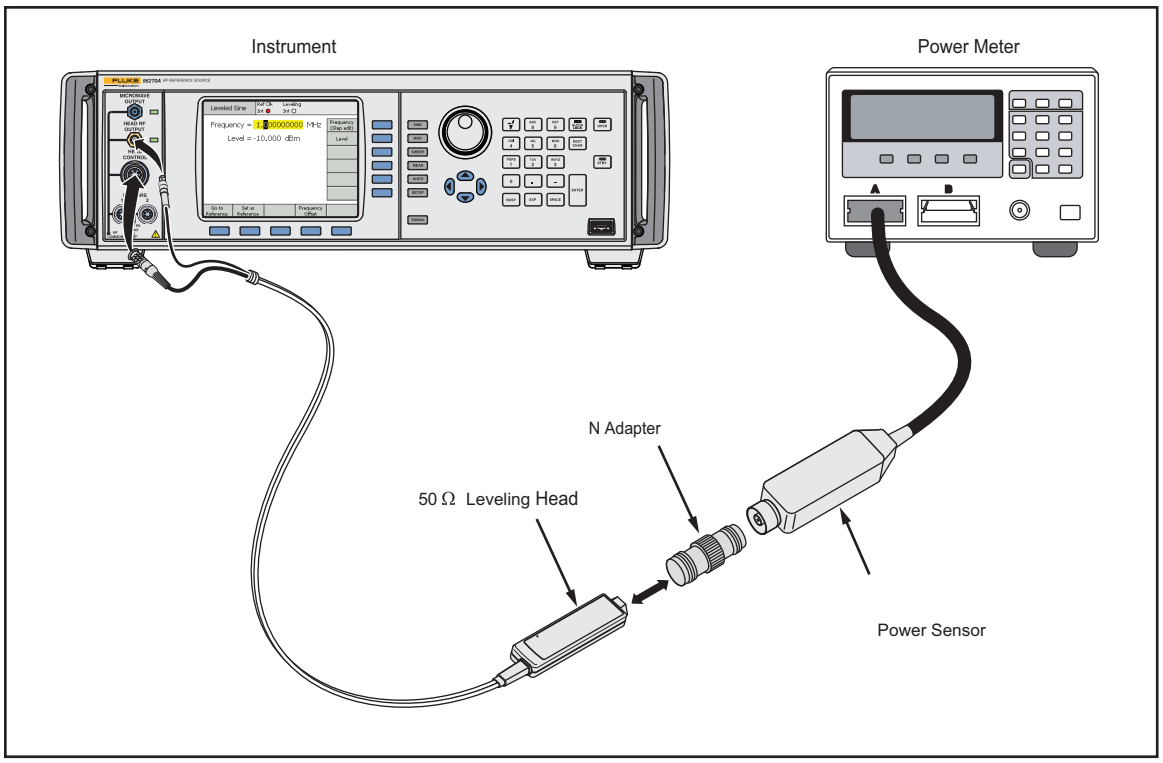

hpn212.eps

Figure 3-6. Equipment Connections - 50 Ω Leveling Head, High Frequency Level Accuracy Test Points (96040A and 96720A)

10. Configure the Power Meter to indicate readings in dBm. Enter the measurement frequency (0.1 MHz) into the Power Meter to enable cal factor (frequency) correction.

Note

The recommended Power Meter has Power Sensor calibration factors stored internally in the sensor. Setting the input frequency in the Power Meter automatically selects the appropriate cal factor for the measurement. However, the Power Sensor may also be accompanied by a table of calibration factors which must be applied externally.

11. Allow the Power Meter reading to settle. Record the measured level in dBm as P_2 for use later in this procedure.

Note

The Power Meter autorange boundary may coincide with a measurement point. To avoid unwanted Power Meter autoranging, manually lock the Power Meter range once the 100 kHz reading is obtained and maintain the Power Meter range lock for all subsequent frequencies at this amplitude.

12. Set the UUT frequency to the first test frequency listed in Table 3-11.

13. Enter the measurement frequency into the Power Meter and allow the Power Meter reading to settle. Record the measured level in dBm as P_3 . Calculate the UUT output $P_{out} = P_1 + (P_3 – P_2)$.

14. Check that the value of P_{out} is within the tolerance shown in Table 3-11.

Note

The insertion loss of the 50 Ω Type-N female-to-female adapter must be taken into account at each measurement frequency.

15. Set the UUT to the next frequency point at this amplitude listed in Table 3-11, and repeat steps 13 through 15.
16. Set the UUT to 100 kHz at the next amplitude listed in Table 3-11, and repeat steps 11 through 15.
17. Set the UUT output to STBY.

Table 3-11. 50 Ω Leveling Head, High Frequency Level Accuracy Test Points, Thermal Power Sensor (96040A and 96720A)

Amplitude	Frequency	Reading	P_{out} Tolerance
+16 dBm	100 kHz	P_2	Reference
	10 MHz	P_3	±0.05 dB
	100 MHz	P_3	±0.05 dB
	300 MHz	P_3	±0.07 dB
	1.4 GHz	P_3	±0.20 dB
+13 dBm	100 kHz	P_2	Reference
	10 MHz	P_3	±0.05 dB
	100 MHz	P_3	±0.05 dB
	300 MHz	P_3	±0.07 dB
	1.4 GHz	P_3	±0.20 dB
	3 GHz	P_3	±0.30 dB
	4 GHz	P_3	±0.30 dB
+3 dBm	100 kHz	P_2	Reference
	10 MHz	P_3	±0.05 dB
	100 MHz	P_3	±0.05 dB
	300 MHz	P_3	±0.07 dB
	1.4 GHz	P_3	±0.20 dB
	3 GHz	P_3	±0.30 dB
	4 GHz	P_3	±0.30 dB

18. Connect the 50 Ω Leveling Head to the 50 Ω diode Power Sensor via a precision 50 Ω Type-N female-to-female adapter. See Figure 3-6 for equipment connections.
19. Set the UUT as follows:

Mode	Leveled Sine
Frequency	100 kHz
Level	-7 dBm
Output	OPER

20. Enter the measurement frequency (0.1 MHz) into the Power Meter to enable cal factor (frequency) correction.

Note

The recommended Power Meter has Power Sensor calibration factors stored internally in the sensor. Setting the input frequency in the Power Meter automatically selects the appropriate cal factor for the measurement. However, the Power Sensor may also be accompanied by a table of calibration factors which must be applied externally.

Note

The diode-based Power Sensor may exhibit frequency dependent linearity errors, and additional corrections for these errors must also be applied.

21. Let the Power Meter reading settle. Record the measured level in dBm as P_2 for use later in this procedure.

Note

The Power Meter autorange boundary may coincide with a measurement point. To avoid unwanted Power Meter autoranging, manually lock the Power Meter range once the 100 kHz reading is obtained and maintain the Power Meter range lock for all subsequent frequencies at this amplitude.

22. Set the UUT frequency to the first test frequency listed in Table 3-12.
23. Enter the measurement frequency into the Power Meter and let the Power Meter reading settle. Record the measured level in dBm as P_3 . Calculate the UUT output $P_{out} = P_1 + (P_3 – P_2)$.
24. Check that the value of P_{out} is within the tolerance shown in Table 3-12.

Note

The insertion loss of the 50 Ω Type-N female-to-female adapter must be taken into account at each measurement frequency.

25. Set the UUT to the next frequency point listed at this amplitude in Table 3-12, and repeat steps 14 through 15.
26. Set the UUT to 100 kHz at the next amplitude listed in Table 3-12, and repeat steps 11 through 16. When the test amplitude is -37 dBm at each frequency record the value of P_{out} at -37 dBm as P_{-37}. These values will be used later in this procedure.
27. Set the UUT output to STBY.

Table 3-12. 50 Ω Leveling Head, High Frequency Level Accuracy Test Points, Diode Power Sensor (96040A and 96720A)

Amplitude	Frequency	Reading	P_{out} Tolerance
-7 dBm	100 kHz	P_2	Reference
	10 MHz	P_3	±0.05 dB
	100 MHz	P_3	±0.05 dB
	300 MHz	P_3	±0.07 dB
	1.4 GHz	P_3	±0.20 dB
	3 GHz	P_3	±0.30 dB
	4 GHz	P_3	±0.30 dB
-17 dBm	100 kHz	P_2	Reference
	10 MHz	P_3	±0.05 dB
	100 MHz	P_3	±0.05 dB
	300 MHz	P_3	±0.07 dB
	1.4 GHz	P_3	±0.20 dB
	3 GHz	P_3	±0.30 dB
	4 GHz	P_3	±0.30 dB
-27 dBm	100 kHz	P_2	Reference
	10 MHz	P_3	±0.05 dB
	100 MHz	P_3	±0.05 dB
	300 MHz	P_3	±0.07 dB
	1.4 GHz	P_3	±0.20 dB
	3 GHz	P_3	±0.30 dB
	4 GHz	P_3	±0.50 dB
-37 dBm	100 kHz	P_2	Reference
	10 MHz	P_3	±0.05 dB
	100 MHz	P_3	±0.05 dB
	300 MHz	P_3	±0.07 dB
	1.4 GHz	P_3	±0.20 dB
	3 GHz	P_3	±0.30 dB
	4 GHz	P_3	±0.50 dB
-47 dBm	100 kHz	P_2	Reference
	10 MHz	P_3	±0.05 dB
	100 MHz	P_3	±0.05 dB
	300 MHz	P_3	±0.07 dB
	1.4 GHz	P_3	±0.20 dB
	3 GHz	P_3	±0.30 dB
	4 GHz	P_3	±0.50 dB

Low-Level Test Points (steps 28-36)

28. Connect the Leveling Head to the RF INPUT of the Measuring Receiver and connect the REF FREQUENCY OUTPUT (rear panel) from the UUT to the Spectrum Analyzer Ext Ref In (on rear). See Figure 3-7 for equipment connections.

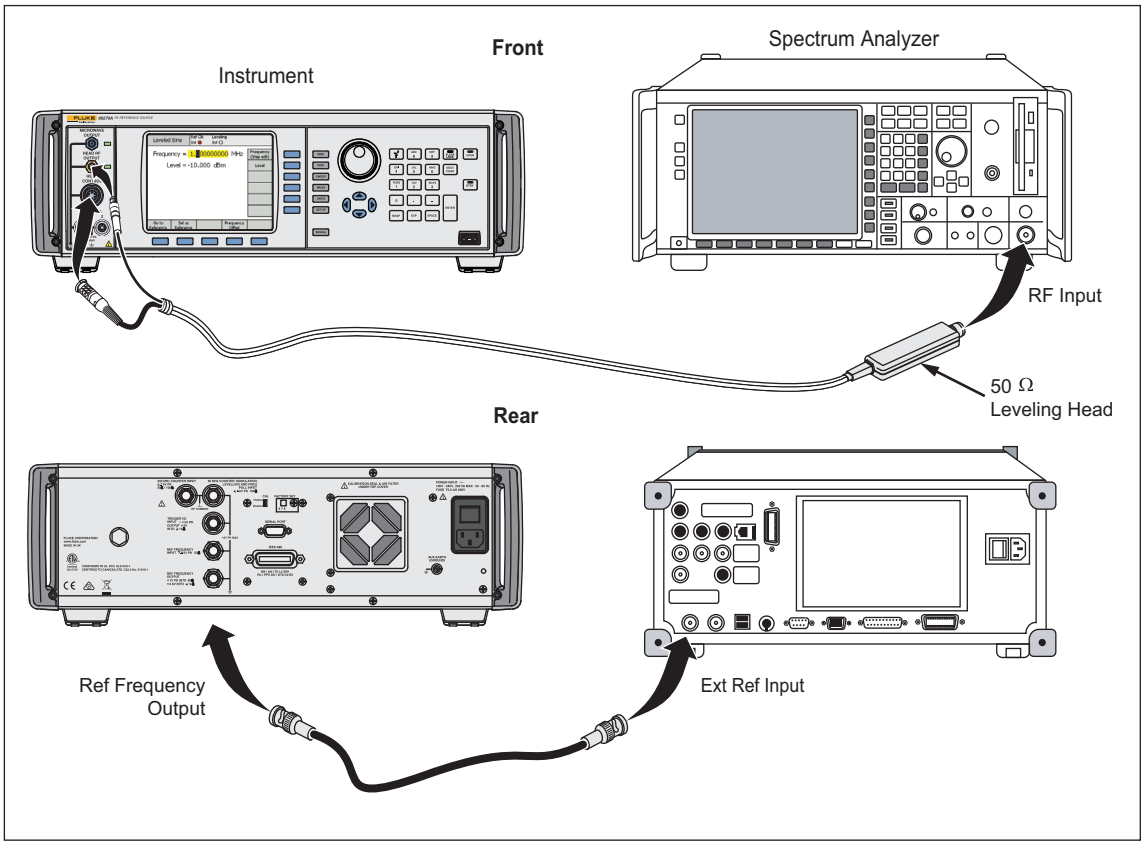

Figure 3-7. Equipment Connections - 50 Ω Leveling Head, Low Level Accuracy Test Points

Note

Low-level measurements are made with a Measuring Receiver, relative to levels previously measured with the Power Sensor and the Measuring Receiver. Two levels (-37 dBm from the Power Sensor and -75 dBm from the Measuring Receiver) are used as reference points to provide the required UUT hardware configuration for the subsequent tests. The value of the output level at -37 dBm measured in steps 19 through 27 above and at -75 dBm measured in steps 30 through 33 below will be used as references in the following procedure, identified as P_{-37} and P_{-75} respectively for each test frequency. It is important that the correct sequence is followed as described.

Making these precision low-level measurements requires appropriate choice of Measuring Receiver settings to provide adequate linearity, noise floor, and reading repeatability throughout the amplitude range required. For any given frequency, the Measuring Receiver settings must be maintained for all amplitudes at that frequency after establishing the reference point. In particular, receiver attenuator, reference level, and resolution bandwidth settings must not change.

29. On the UUT, enable the REF FREQUENCY OUTPUT at 10 MHz and set the UUT as follows:

Frequency	100 kHz
Level	-37 dBm
Output	OPER

30. Allow the Measuring Receiver to tune the input signal, and then set the controls to measure RF level, relative (dB) to the current input level.
31. Without changing any Measuring Receiver settings, set the UUT to the next amplitude listed in part A of Table 3-13 for this frequency. Allow the Measuring Receiver reading to stabilize and record the reading as P_{rel}. (Note that P_{rel} will be a negative number in dB).
32. Calculate the UUT output $P_{out} = P_{-37} + P_{rel}$. Check that the value of P_{out} is within the tolerance shown in Table 3-13.
33. Repeat steps 31 and 32 for each amplitude listed in part A of Table 3-13 for this frequency.
34. Return the UUT output to -37 dBm, set the UUT frequency to the next frequency listed in part A of Table 3-13, and repeat steps 30 through 34.
35. Set the UUT to 100 kHz at -75 dBm. Repeat steps 30 through 35 for the points listed in part B of Table 3-13 using the calculation $P_{out} = P_{-75} + P_{rel}$ in step 32.
36. Set the UUT to STBY.

Table 3-13. 50 Ω Leveling Head, Low-Level Accuracy Test Points Part A (96040A and 96270A)

Part	Frequency	Amplitude	Reading	P_{out} Tolerance
A	100 kHz	-37 dBm	Reference	Reference
		-47 dBm	P_{rel}	±0.03 dB
		-57 dBm	P_{rel}	±0.20 dB
		-66 dBm	P_{rel}	±0.20 dB
		-75 dBm (P_{-75})	P_{rel}	±0.50 dB
		-85 dBm	P_{rel}	±0.50 dB
	10 MHz	-37 dBm	P_{-37}	Reference
		-47 dBm	P_{rel}	±0.05 dB
		-57dBm	P_{rel}	±0.10 dB
		-66 dBm	P_{rel}	±0.10 dB
		-75 dBm (P_{-75})	P_{rel}	±0.10 dB
		-85 dBm	P_{rel}	±0.30 dB
		-95 dBm	P_{rel}	±0.70 dB
	100 MHz	-37 dBm	Reference	Reference
		-47 dBm	P_{rel}	±0.05 dB
		-57 dBm	P_{rel}	±0.10 dB
		-66 dBm	P_{rel}	±0.10 dB
		-75 dBm (P_{-75})		±0.10 dB
		-85 dBm	P_{rel}	±0.30 dB
		-95 dBm	P_{rel}	±1.50 dB
	300 MHz	-37 dBm	P_{-37}	Reference
		-47 dBm	P_{rel}	±0.07 dB
		-57 dBm	P_{rel}	±0.10 dB
		-66 dBm	P_{rel}	±0.10 dB
		-75 dBm (P_{-75})	P_{rel}	±0.30 dB
		-85 dBm	P_{rel}	±0.50 dB
		-95 dBm	P_{rel}	±1.50 dB
	1.4 GHz	-37 dBm	Reference	Reference
		-47 dBm	P_{rel}	±0.20 dB
		-57 dBm	P_{rel}	±0.40 dB
		-66 dBm	P_{rel}	±0.40 dB
		-75 dBm	P_{rel}	±0.50 dB
		-75 dBm (P_{-75})	P_{rel}	±1.00 dB
		-85 dBm	P_{rel}	±1.50 dB
		-95 dBm	P_{rel}	±1.00 dB
	3 GHz	-37 dBm	P_{-37}	Reference
		-47 dBm	P_{rel}	±0.30 dB
		-57 dBm	P_{rel}	±0.50 dB
		-66 dBm	P_{rel}	±0.50 dB
		-75 dBm (P_{-75})	P_{rel}	±1.00 dB
		-85 dBm	P_{rel}	±1.00 dB
	4 GHz	-37 dBm	Reference	Reference
		-47 dBm	P_{rel}	±0.50 dB
		-57 dBm	P_{rel}	±0.50 dB
		-66 dBm	P_{rel}	±0.50 dB
		-75 dBm (P_{-75})	P_{rel}	±1.00 dB
		-85 dBm	P_{rel}	±1.00 dB
		-85 dBm	P_{rel}	±0.50 dB

Table 3-13. 50 Ω Leveling Head,-Low Level Accuracy Test Points Part B (96040A and 96270A)

Part	Frequency	Amplitude	Reading	P_{out} Tolerance
B	100 kHz	-75 dBm	Reference	Reference
		-85 dBm	P_{rel}	±0. 50 dB
	10 MHz	-75 dBm	Reference	Reference
		-85 dBm	P_{rel}	±0.30 dB
		-95 dBm	P_{rel}	±0.70 dB
	100 MHz	-75 dBm	Reference	Reference
		-85 dBm	P_{rel}	±0.30 dB
		-95 dBm	P_{rel}	±0.70 dB
	300 MHz	-75 dBm	P_{-37}	Reference
		-85 dBm	P_{rel}	±0.50 dB
		-95 dBm	P_{rel}	±1.50 dB
	1.4 GHz	-75 dBm	Reference	Reference
		-85 dBm	P_{rel}	±1.00 dB
		-95 dBm	P_{rel}	±1.50 dB
	3 GHz	-75 dBm	P_{-37}	Reference
		-85 dBm	P_{rel}	±1.00 dB
	4 GHz	-75 dBm	Reference	Reference
		-85 dBm	P_{rel}	±1.00 dB

Note

The above procedure and test points listed in Table 3-12 verify the performance of all the level control and attenuation circuits that determine level accuracy throughout the entire amplitude range, avoiding the need to make difficult precision level measurements at extremely low levels below -95 dBm. However, the following optional ultra-low-level measurement procedure is provided for users choosing to verify the lower level outputs directly.

Optional Ultra-Low Level Test Points (steps 37-43)

If required, use the subsequent optional procedure to verify the absolute level accuracy of the UUT below -95 dBm.

Note

Ultra-low-level measurements are made relative to a level previously measured with the Measuring Receiver. Measurements made at -75 dBm are used as reference points to provide the required UUT hardware configuration for the subsequent tests. The value of the output level at -75 dBm measured in steps 28 through 36 above will be used as references in the subsequent procedure, identified as P_{-75} for each test frequency. It is important that the correct sequence is followed as described.

Making these precision ultra-low-level measurements requires appropriate choice of Measuring Receiver settings to provide adequate linearity, noise floor, and reading repeatability throughout the amplitude range required. For any given frequency the Measuring Receiver the settings must be maintained for all amplitudes at that frequency after establishing the reference point. In particular, receiver attenuator, reference level, and resolution bandwidth settings must not change.

37. On the UUT, enable the REF FREQUENCY OUTPUT at 10 MHz and set the UUT as follows:

Frequency	10 MHz
Level	-75 dBm
Output	OPER

38. Allow the Measuring Receiver to tune the input signal, and then set the controls to measure RF level, relative (dB) to the current input level.
39. Without changing any Measuring Receiver settings, set the UUT to the next amplitude listed in Table 3-14 for this frequency. Allow the Measuring Receiver reading to stabilize and record the reading as P_{rel}. (Note that P_{rel} will be a negative number in dB).
40. Calculate the UUT output $P_{out} = P_{-75} + P_{rel}$. Check that the value of P_{out} is within the tolerance shown in Table 3-14.
41. Repeat steps 39 and 40 for each amplitude listed in Table 3-14 for this frequency.
42. Return the UUT output to -75 dBm, set the UUT frequency to the next frequency listed in Table 3-14 and repeat steps 39 through 42.
43. Set the UUT to STBY.

Table 3-14. 50 Ω Leveling Head, Optional Ultra-Low Level Accuracy Test Points (96040A and 96270A)

Frequency	Amplitude	Reading	P_{out} Tolerance
10 MHz	-75 dBm	Reference	Reference
	-105 dBm	P_{rel}	±0.7 dB
	-115 dBm	P_{rel}	±0.7 dB
	-124 dBm	P_{rel}	±0.7 dB
100 MHz	-75 dBm	Reference	Reference
	-105 dBm	P_{rel}	±0.7 dB
	-115 dBm	P_{rel}	±0.7 dB
	-124 dBm	P_{rel}	±0.7 dB
300 MHz	-75 dBm	Reference	Reference
	-105 dBm	P_{rel}	±1.5 dB
	-115 dBm	P_{rel}	±1.5 dB
	-124 dBm	P_{rel}	±1.5 dB
1.4 GHz	-75 dBm	Reference	Reference
	-105 dBm	P_{rel}	±1.5 dB
	-115 dBm	P_{rel}	±1.5 dB
	-124 dBm	P_{rel}	±1.5 dB

Attenuation Accuracy – 50 Ω Leveling Head (Optional 96040A and 96270A)

Equipment required for this test:

- Measuring Receiver
- Attenuator, 6 dB, 50 Ω, N-Type
- 50 Ω Leveling Head (supplied with UUT)

Note

In the subsequent tests, the tolerances shown refer to specifications listed in the Chapter 1, Specifications *section of this manual. In some cases the test limits must be altered due to the uncertainty of the actual equipment used. For example, if the Instrument specification is ±0.025 dB and the Measuring Receiver uncertainty is ±(0.015 dB + 0.005 dB per 10 dB step) the test limit for 30 dB would be ±0.039 dB (the root-sum-square of 0.025 and 0.030).*

To verify the attenuation accuracy of the UUT output relative to +10 dBm, 50 Ω:

1. Connect the Leveling Head to the RF INPUT of the Measuring Receiver via a 6 dB attenuator and connect the REF FREQUENCY OUTPUT (rear panel) from the UUT to the Spectrum Analyzer Ext Ref In (on rear). See Figure 3-8 for equipment connections.

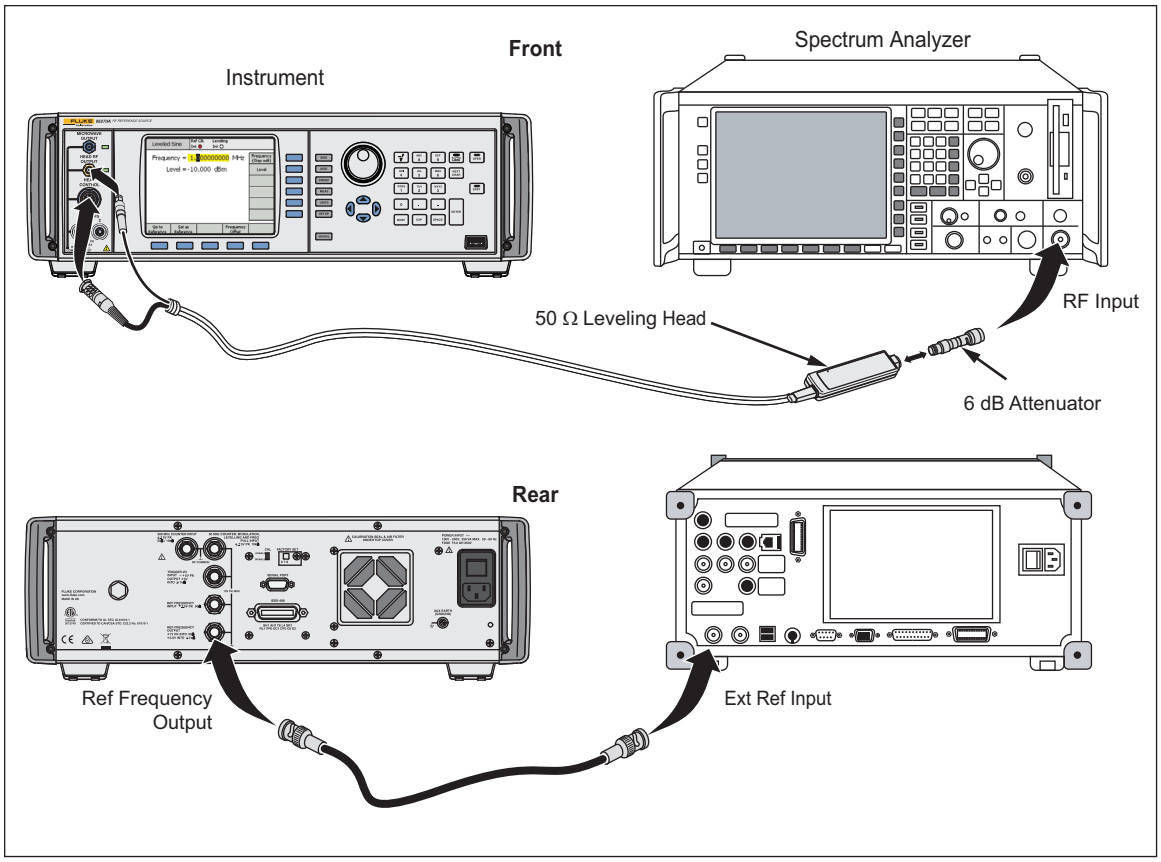

Figure 3-8. Equipment Connections - 50 Ω Leveling Head Attenuation Accuracy Test

Note

The 6 dB attenuator is used to minimize mismatch errors. In some cases, additional attenuation is required to satisfy alternative Measuring Receiver maximum input limitations.

Note

Unwanted interference from signals at 10 MHz due to the frequency reference outputs of equipment operating in the vicinity of the test setup or the equipment used during the tests can cause erroneous results. To avoid such problems, add a small offset (50 kHz) to the listed nominal test frequency.

2. On the UUT enable the REF FREQUENCY OUTPUT at 10 MHz, set the UUT as follows:

Note

For the 96270A, ensure the Leveling Head output is selected.

Frequency	10 MHz
Level	+10 dBm
Output	OPER

3. Let the Measuring Receiver tune the input signal, and then set the controls to measure RF level, relative (dB) to the current input level.
4. At each attenuation level listed in Table 3-15, allow the Measuring Receiver reading to stabilize, ensuring the indicated value is within the relevant tolerance.
5. Return the UUT attenuation to 0 dB (+10 dBm).
6. Repeat steps 2 through 6 at the attenuation levels shown in Table 3-15 for frequencies of 50 MHz and 100 MHz.
7. Set the UUT to STBY.

Table 3-15. 50 Ω Leveling Head Attenuation Accuracy (50 Ω) Test Points

Nominal Attenuation	Absolute Output Level	Specification
0 dB	+10 dBm	Reference
-7 dB	+3 dBm	±0.02 dB
-17 dB	-17 dBm	±0.02 dB
-27 dB	-27 dBm	±0.02 dB
-37 dB	-37 dBm	±0.02 dB
-47 dB	-47 dBm	±0.02 dB
-57 dB	-57 dBm	±0.03 dB
-67 dB	-67 dBm	±0.05 dB
-76 dB	-66 dBm	±0.07 dB
-85 dB	-75 dBm	±0.07 dB
-95 dB	-85 dBm	±0.15 dB
-105 dB	-95 dBm	±0.15 dB

VSWR Test – 50 Ω Leveling Head (Optional 96040A and 96270A)

Equipment required for this test:

- Signal Source, 50 Ω output
- Spectrum Analyzer
- 50 Ω directional bridge
- Precision 50 Ω Open/Short termination
- 50 Ω Leveling Head (supplied with UUT)

To verify the UUT's Leveling Head output VSWR using a directional bridge and a Spectrum Analyzer:

1. Connect the REF FREQUENCY OUTPUT (rear panel) from the UUT to the Spectrum Analyzer and signal generator external reference inputs using a BNC tee and BNC male – male cable assemblies. Set the Spectrum Analyzer and signal generator for external frequency reference. See Figure 3-9.

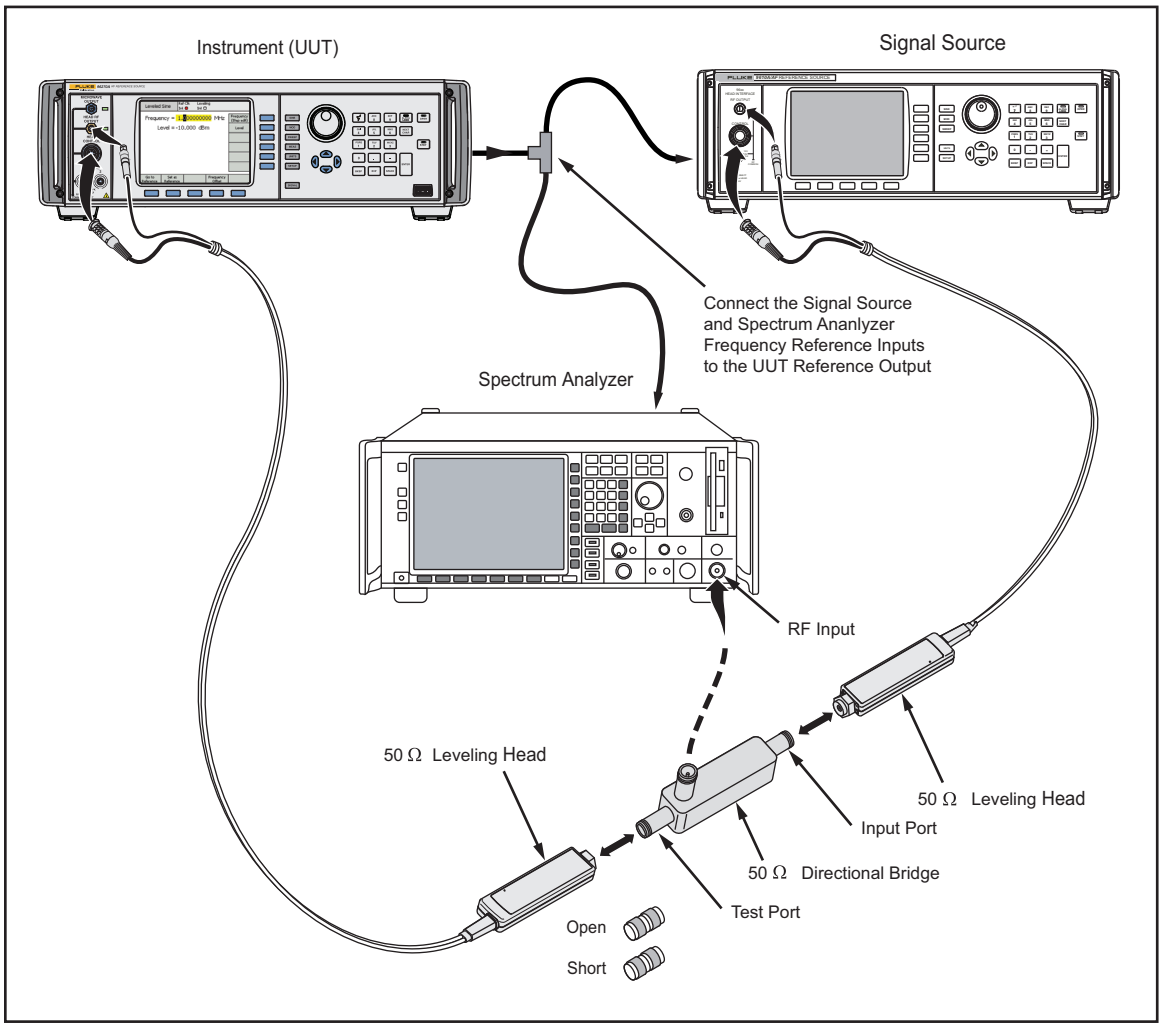

Figure 3-9. Equipment Connections - 50 Ω Leveling Head VSWR Test (96040A and 96270A)

2. On the UUT enable the REF FREQUENCY OUTPUT at 10 MHz. Ensure the Spectrum Analyzer and signal generator external reference frequency inputs are enabled for input at 10 MHz.
3. Connect the signal generator RF output to the input port of the directional bridge. Connect the directional bridge coupled (output) port to the Spectrum Analyzer input.

Note

To determine the reference level setting of the Spectrum Analyzer, the UUT must initially be connected to the directional bridge.

4. Connect the UUT to the test port of the directional bridge.
5. Set the Spectrum Analyzer as follows:

PRESET	
EXT REF	On
REF LVL	+10 dBm
FREQ	500 MHz
SPAN	Zero Span

6. Set the signal generator as follows:

Frequency	500.00001 MHz
Amplitude	0 dBm
Output	On

7. Set the UUT as follows:

Note

For the 96270A, ensure the Leveling Head output is selected.

Frequency	500 MHz
Level	+13 dBm
Output	OPER

8. Adjust the Spectrum Analyzer reference level to place the displayed trace approximately 3 dB below the reference level line.
9. Set the UUT to STBY and disconnect it from the directional bridge. Connect the open (50 Ω) termination to the directional bridge test port.
10. Set the Spectrum Analyzer display units to volts and perform a peak search. Note the marker indication with the test port open.
11. Connect a Type-N short to the directional bridge test port. Perform a peak search with the test port shorted and note the marker indication. Remove the short.
12. Compute the average of the values measured with the test port open and shorted. Record this number as Z_{Max} for the test frequency of 500 MHz.
13. Repeat steps 6 through 12 for the next test frequency at +13 dBm listed in Table 3-16, setting the Spectrum Analyzer center frequency to the test frequency and recording Z_{Max} for each test frequency.

14. Reconnect the directional bridge test port to the UUT and set it to OPER.
15. Set the Spectrum Analyzer display to linear. Set the sweep time to 5 ms, single sweep.
16. Set the UUT frequency to 500 MHz, set the signal generator frequency to 500.00001 MHz, and set the Spectrum Analyzer center frequency to 500 MHz.
17. Initiate a single sweep. Allow the sweep to complete then perform a (maximum) peak search. Note the marker amplitude.
18. Perform a (minimum) peak search and note the marker amplitude.
19. Calculate the difference of the maximum and minimum peak searches, dividing the difference by 2 to determine the peak value. Record this number as $Z_{UUT.}$

Note

Because the reflected signal level is a peak to peak value and the reference value to which it is compared is a peak value, the reflected level must be divided by 2 to convert it to a peak value.

20. Compute the voltage reflection coefficient using the following formula:

$$\rho_{\ell} = \frac{Z_{UUT}}{Z_{Max}}$$

21. Using the formula below, calculate the UUT VSWR. The calculated value must be <1.1.

$$VSWR = \frac{1 + \rho_{\ell}}{1 - \rho_{\ell}}$$

22. Repeat steps 16 through 21 for the remaining test frequencies and maximum VSWR values in Table 3-16, setting the Spectrum Analyzer center frequency in step 15 to the test frequency.
23. Repeat steps 5 through 22 for the remaining UUT output levels and maximum VSWR values in Table 3-16.
24. Set the UUT to STBY.

Table 3-16. 50 Ω Leveling Head VSWR Test (96040A and 96270A)

Level	Frequency	Signal Generator Frequency	Maximum VSWR
+13 dBm	100 MHz	100.000 01 MHz	<1.05
	2 GHz	2.000 000 01 GHz	<1.10
	3 GHz	3.000 000 01 GHz	<1.15
	4 GHz	4.000 000 01 GHz	<1.20
+3 dBm	100 MHz	100.000 01 MHz	<1.05
	2 GHz	2.000 000 01 GHz	<1.10
	3 GHz	3.000 000 01 GHz	<1.15
	4 GHz	4.000 000 01 GHz	<1.20
-7 dBm	100 MHz	100.000 01 MHz	<1.05
	2 GHz	2.000 000 01 GHz	<1.10
	3 GHz	3.000 000 01 GHz	<1.15
	4 GHz	4.000 000 01 GHz	<1.20

Level Accuracy – 75 Ω Levelling Head (96040A and 96270A)

Equipment required for this test:

- AC Measurement Standard
- Precision 75 Ω feedthrough termination
- 75 Ω Type-N female-to-BNC male adapter
- Power Meter
- Power Sensor, 75 Ω
- Precision Adapter, Type-N female-to-female, 75 Ω
- 75 Ω to 50 Ω impedance-matching pad
- Spectrum Analyzer
- 75 Ω Leveling Head (supplied with UUT)

Use the subsequent procedure to verify the absolute level accuracy of the UUT 75 Ω output. The procedure makes use of an AC Measurement Standard, followed by a Power Meter and sensors, and finally, a Spectrum Analyzer/Measuring Receiver. At various points within the process values previously measured using one reference device are required for subsequent use with another device. To aid readability, the procedure is divided into stages, however the complete procedure must be done in the sequence described. Fluke Calibration recommends that the users familiarize themselves with the entire absolute level accuracy verification procedure before commencing.

Note

Unwanted interference from signals at 10 MHz due to the frequency reference outputs of equipment operating in the vicinity of the test setup or the equipment used during the tests can cause erroneous results. To avoid such problems, when test frequencies are from 10 MHz to 300 MHz, add a small offset (50 kHz) to the nominal frequency if the test frequency is a multiple of 10 MHz.

Low Frequency Test Points (steps 1-7)

1. Connect the 75 Ω Leveling Head to the INPUT 1 connector on the AC Measurement Standard using a precision 75 Ω feedthrough termination. (If a Type-N feedthrough termination is not available, use a BNC 75 Ω feedthrough termination and appropriate adapters. Ensure that BNC connector contact resistance and repeatability does not significantly degrade measurement uncertainty) Select INPUT 1. See Figure 3-10 for equipment connections.

   Note

   Use a common mode choke to obtain satisfactory noise performance and accurate readings. Insert the common mode choke in series between the feedthrough termination and the AC Measurement Standard input, with the ground applied at the choke input. Keep the ground connection as short as possible and set the AC Measurement Standard to Internal Guard. A common mode choke of 250 µH is usually effective. A suitable choke is 6 turns of small-diameter coaxial cable through a TDK toroid, manufacturer's part no. H5C2-T28-13-16 (available as Fluke part no. 474908) Refer to the 5970A Operator Manual for additional explanation.

   Note

   Measurements made on the 5790A 2.2 mV range (at levels below -42 dBm) require correction for the 2.2 mV range linearity error.

2. Set the UUT as follows:

   Note

   For the 96270A, ensure the Leveling Head output is selected.

Mode	Leveled Sine
Frequency	1 kHz
Level	+10 dBm
Output	OPER

3. Allow the AC Measurement Standard to make several measurements and the reading to settle. Convert the settled reading from V rms to dBm using the following formula:

$$\text{dBm (75 }\Omega) = 10 Log_{10}\left(\frac{V^2}{75 \times 0.001}\right)$$

   The result must be within the tolerance listed in Table 3-17.

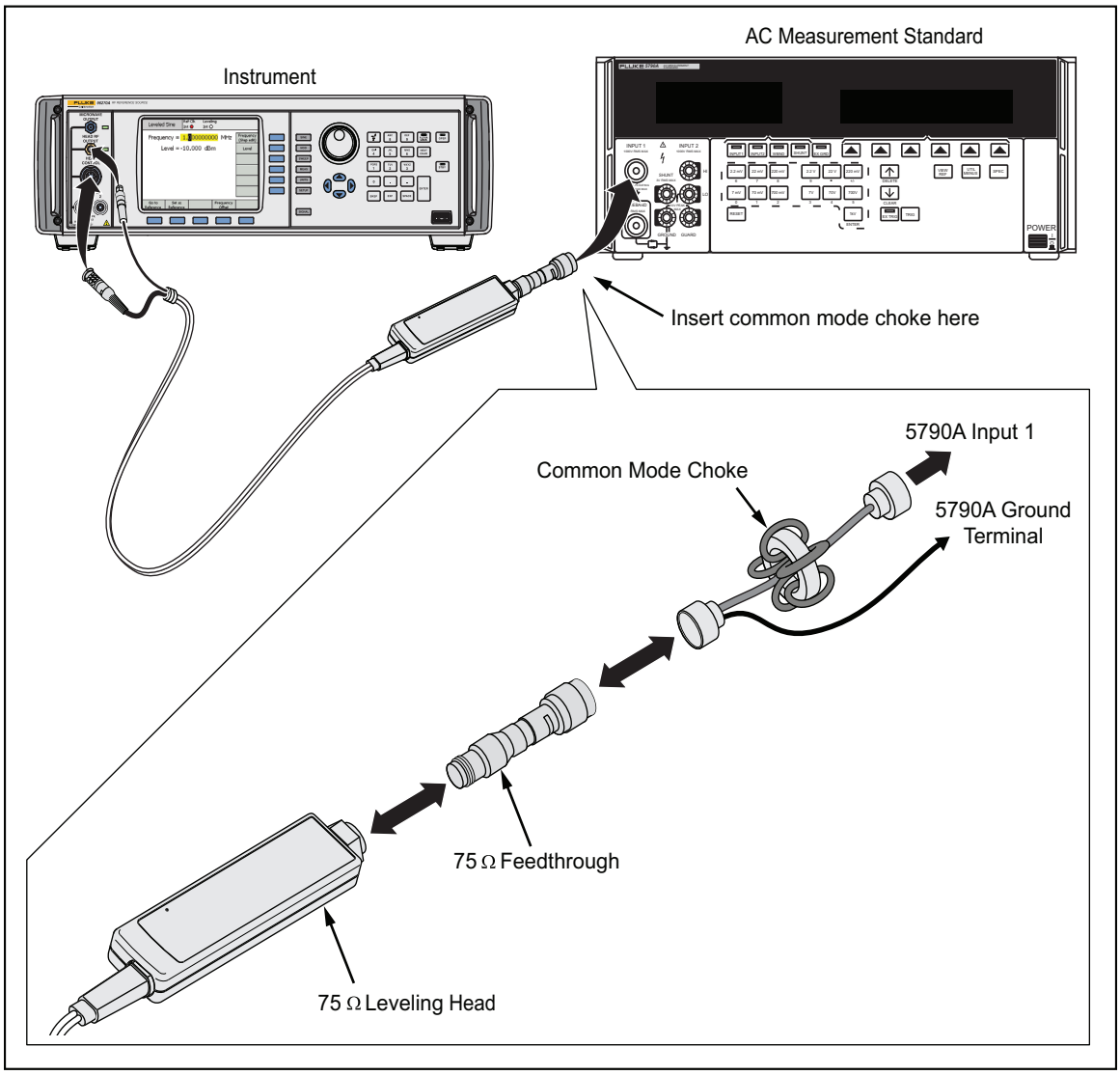

hpn223.eps

Figure 3-10. 75 Ω Equipment Connections - Leveling Head, Low Frequency Level Accuracy Test Points (96040A and 96270A)

4. Set the UUT output to the next frequency listed in Table 3-17 for this test amplitude.
5. Repeat step 3 and confirm that the measured output level is within the tolerance shown in Table 3-17.
6. When the test frequency is 100 kHz, record the measured level in dBm as P_1 for use later in this procedure.
7. Repeat steps 2 through 6 for the next test amplitude listed in Table 3-17, applying the 5790A 2.2 mV range linearity error correction at levels below -40 dBm.

Table 3-17. Level Accuracy Test (75 Ω), Low Frequency Test Points

Amplitude	Frequency	Tolerance
+10 dBm	1 kHz	±0.12 dB
	20 kHz	±0.12 dB
	100 kHz (P_1)	±0.12 dB
+7 dBm	1 kHz	±0.12 dB
	20 kHz	±0.12 dB
	100 kHz (P_1)	±0.12 dB
-3 dBm	1 kHz	±0.12 dB
	20 kHz	±0.12 dB
	100 kHz (P_1)	±0.12 dB
-13 dBm	1 kHz	±0.12 dB
	20 kHz	±0.12 dB
	100 kHz	±0.12 dB
-23 dBm	1 kHz	±0.12 dB
	20 kHz	±0.12 dB
	100 kHz (P_1)	±0.12 dB
-33 dBm	1 kHz	±0.15 dB
	20 kHz	±0.15 dB
	100 kHz (P_1)	±0.15 dB
-43 dBm	1 kHz	±0.15 dB
	20 kHz	±0.15 dB
	100 kHz (P_1)	±0.15 dB

High Frequency Test Points (steps 8-17)

8. Connect the 75 Ω Leveling Head to the 75 Ω Power Sensor via a precision 75 Ω Type-N female-to-female adapter. See Figure 3-11 for equipment connections.

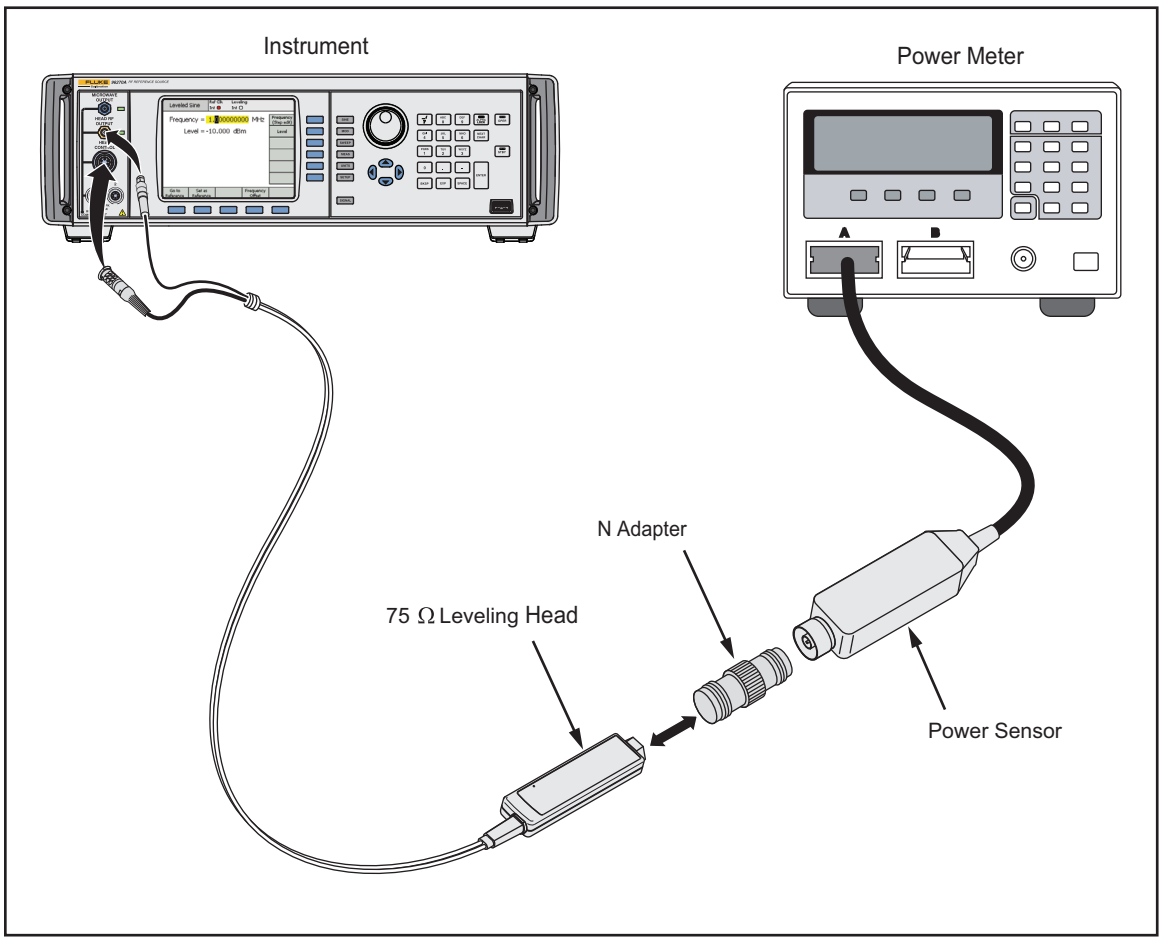

Figure 3-11. Equipment Connections- 75 Ω Leveling Head, High Frequency Level Accuracy Test Points (96040A and 96270A)

9. Set the UUT as follows:

Mode	Leveled Sine
Frequency	100 kHz
Level	+10 dBm
Output	OPER

10. Configure the Power Meter to indicate readings in dBm. Enter the measurement frequency (0.1 MHz) into the Power Meter to enable cal factor (frequency) correction.

Note

The recommended Power Meter has Power Sensor calibration factors stored internally in the sensor. Setting the input frequency in the Power Meter automatically selects the appropriate cal factor for the measurement. However, the Power Sensor may also be accompanied by a table of calibration factors which must be applied externally.

Note

A diode-based Power Sensor may exhibit frequency dependent linearity errors, and additional corrections for these errors must also be applied.

11. Allow the Power Meter reading to settle. Record the measured level in dBm as P_2 for use later in this procedure.

Note

The Power Meter autorange boundary may coincide with a measurement point. To avoid unwanted Power Meter autoranging, manually lock the Power Meter range once the 100 kHz reading is obtained and maintain the Power Meter range lock for all subsequent frequencies at this amplitude.

12. Set the UUT frequency to the first test frequency listed in Table 3-18.
13. Enter the measurement frequency into the Power Meter and allow the Power Meter reading to settle. Record the measured level in dBm as P_3 . Calculate the UUT output $P_{out} = P_1 + (P_3 – P_2)$.
14. Check that the value of P_{out} is within the tolerance shown in Table 3-18.

Note

The insertion loss of the 75 Ω Type-N female-to-female adapter must be taken into account at each measurement frequency.

15. Set the UUT to the next frequency point listed in Table 3-18 at this amplitude, and repeat steps 13 through 15.
16. Set the UUT to 100 kHz at the next amplitude listed in Table 3-18, and repeat steps 10 through 16.
17. Set the UUT output to STBY.

Table 3-18. 75 Ω Leveling Head, High Frequency Level Accuracy Test Points (96040A and 96270A)

Amplitude	Frequency	Reading	P_{out} Tolerance
+10 dBm	100 kHz	P_2	Reference
	10 MHz	P_3	±0.12 dB
	100 MHz	P_3	±0.12 dB
	300 MHz	P_3	±0.15 dB
	1 GHz	P_3	±0.25 dB
+7 dBm	100 kHz	P_2	Reference
	10 MHz	P_3	±0.12 dB
	100 MHz	P_3	±0.12 dB
	300 MHz	P_3	±0.15 dB
	1.4 GHz	P_3	±0.25 dB
	2 GHz	P_3	±0.30 dB
-3 dBm	100 kHz	P_2	Reference
	10 MHz	P_3	±0.12 dB
	100 MHz	P_3	±0.12 dB
	300 MHz	P_3	±0.15 dB
	1.4 GHz	P_3	±0.25 dB
	2 GHz	P_3	±0.30 dB
-13 dBm	100 kHz	P_2	Reference
	10 MHz	P_3	±0.12 dB
	100 MHz	P_3	±0.12 dB
	300 MHz	P_3	±0.15 dB
	1.4 GHz	P_3	±0.25 dB
	2 GHz	P_3	±0.30 dB
-23 dBm	100 kHz	P_2	Reference
	10 MHz	P_3	±0.12 dB
	100 MHz	P_3	±0.12 dB
	300 MHz	P_3	±0.15 dB
	1.4 GHz	P_3	±0.25 dB
	2 GHz	P_3	±0.3 dB
-33 dBm	100 kHz	P_2	Reference
	10 MHz	P_3	±0.15 dB
	100 MHz	P_3	±0.15 dB
	300 MHz	P_3	±0.20 dB
	1.4 GHz	P_3	±0.50 dB
	2 GHz	P_3	±0.50 dB
-43 dBm	100 kHz	P_2	Reference
	10 MHz	P_3	±0.15 dB
	100 MHz	P_3	±0.15 dB
	300 MHz	P_3	±0.20 dB
	1.4 GHz	P_3	±0.50 dB
	2 GHz	P_3	±0.50 dB

Low Level Test Points (steps 18-26)

18. Connect the Leveling Head to the RF INPUT of the Measuring Receiver and connect the REF FREQUENCY OUTPUT (rear panel) from the UUT to the Spectrum Analyzer Ext Ref In (on rear). See Figure 3-12 for equipment connections.

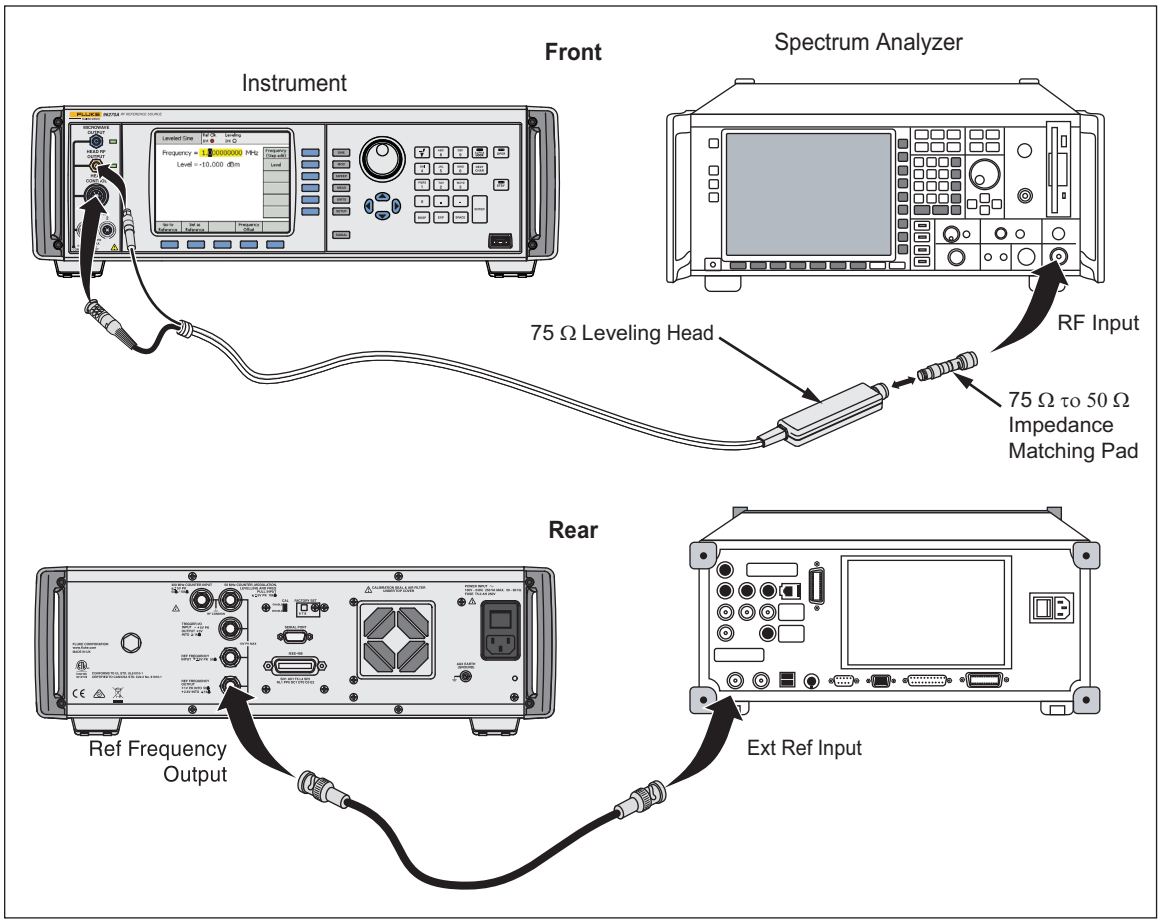

Figure 3-12. Equipment Connections- 75 Ω Leveling Head, Low Level Accuracy Test Points (96040A and 96270A)

Note

Low-level measurements are made with a Measuring Receiver, relative to levels previously measured with the Power Sensor. Two levels (-33 dBm and -43 dBm) are used as reference points to provide the required UUT hardware configurations for the subsequent tests. It is important that the correct sequence is followed as described.

Making these precision low-level measurements requires appropriate choice of Measuring Receiver settings to provide adequate linearity, noise floor, and reading repeatability throughout the amplitude range required. For any given frequency the Measuring Receiver the settings must be maintained for all amplitudes at that frequency after establishing the reference point. In particular, receiver attenuator, reference level, and resolution bandwidth settings must not change.

19. On the UUT enable the REF FREQUENCY OUTPUT a 10 MHz and set the UUT as follows:

Frequency	100 kHz
Level	-33 dBm
Output	OPER

20. Allow the Measuring Receiver to tune the input signal, and then set the controls to measure RF level, relative (dB) to the current input level.
21. Without changing any Measuring Receiver settings, set the UUT to the next amplitude for this frequency listed in Table 3-19. Allow the Measuring Receiver reading to stabilize and record the reading as P_{rel}. (Note that P_{rel} will be a negative number in dB).
22. Calculate the UUT output $P_{out} = P_{-33} + P_{rel}$. Check that the value of P_{out} is within the tolerance shown in part A of Table 3-19.
23. Repeat steps 22 and 23 for each amplitude listed for this frequency in part A of Table 3-19.
24. Return the UUT output to -33 dBm, set the UUT frequency to the next frequency listed in part A of Table 3-19 and repeat steps 21 through 24.
25. Set the UUT to 100 kHz. Repeat steps 21 through 25 for the points listed in part B of Table 3-19 using the calculation $P_{out} = P_{-43} + P_{rel}$ in step 22.
26. Set the UUT to STBY.

Table 3-19. 75 Ω Leveling Head, Low Level Accuracy Test Points, Part A (96040A and 96270A)

Part	Frequency	Amplitude	Reading	P_{out} Tolerance
A	100 kHz	-33 dBm	Reference	Reference
		-53 dBm	P_{rel}	±0.15 dB
		-72 dBm	P_{rel}	±0.20 dB
		-81 dBm (P_{-81})	P_{rel}	±0.70 dB
	10 MHz	-33 dBm	Reference	Reference
		-53 dBm	P_{rel}	±0.15 dB
		-72 dBm	P_{rel}	±0.20 dB
		-81 dBm (P_{-81})	P_{rel}	±0.70 dB
	100 MHz	-33 dBm	Reference	Reference
		-53 dBm	P_{rel}	±0.15 dB
		-72 dBm	P_{rel}	±0.20 dB
		-81 dBm (P_{-81})	P_{rel}	±0.70 dB
	300 MHz	-33 dBm	Reference	Reference
		-53 dBm	P_{rel}	±0.20 dB
		-72 dBm	P_{rel}	±0.20 dB
		-81 dBm (P_{-81})	P_{rel}	±0.70 dB
	1.4 GHz	-33 dBm	Reference	Reference
		-53 dBm	P_{rel}	±0.15 dB
		-72 dBm	P_{rel}	±0.20 dB
		-81 dBm (P_{-81})	P_{rel}	±1.00 dB
	2 GHz	-33 dBm	Reference	Reference
		-53 dBm	P_{rel}	±0.50 dB
		-72 dBm	P_{rel}	±0.50 dB
		-81 dBm (P_{-81})	P_{rel}	±1.00 dB

Table 3-20. 75 Ω Leveling Head, Low Level Accuracy Test Points, Part B (96040A and 96270A)

Part	Frequency	Amplitude	Reading	P_{out} Tolerance
B	100 kHz	-33 dBm	Reference	Reference
		-53 dBm	P_{rel}	±0.15 dB
		-63 dBm	P_{rel}	±0.20 dB
		-81 dBm	P_{rel}	±0.70 dB
	10 MHz	-33 dBm	Reference	Reference
		-53 dBm	P_{rel}	±0.20 dB
		-63 dBm	P_{rel}	±0.20 dB
		-81 dBm	P_{rel}	±0.70 dB
		-101 dBm (P_{-101})	P_{rel}	±1.50 dB
	125 MHz	-33 dBm	Reference	Reference
		-53 dBm	P_{rel}	±0.15 dB
		-63 dBm	P_{rel}	±0.20 dB
		-81 dBm	P_{rel}	±0.70 dB
		-101 dBm (P_{-101})	P_{rel}	±1.50 dB
	300 MHz	-33 dBm	Reference	Reference
		-53 dBm	P_{rel}	±0.15 dB
		-63 dBm	P_{rel}	±0.20 dB
		-81 dBm	P_{rel}	±0.70 dB
		-101 dBm (P_{-101})	P_{rel}	±1.50 dB
	1.4 GHz	-33 dBm	Reference	Reference
		-53 dBm	P_{rel}	±0.50 dB
		-63 dBm	P_{rel}	±0.50 dB
		-81 dBm	P_{rel}	±1.00 dB
		-101 dBm (P_{-101})	P_{rel}	±1.50 dB
	2 GHz	-33 dBm	Reference	Reference
		-53 dBm	P_{rel}	±0.50 dB
		-63 dBm	P_{rel}	±0.50 dB
		-81 dBm	P_{rel}	±1.00 dB
		-101 dBm (P_{-101})	P_{rel}	±1.50 dB

Note

The above procedure and test points listed in Tables 3-18 and 3-19 verify the performance of all the level control and attenuation circuits that determine level accuracy throughout the entire amplitude range, avoiding the need to make difficult precision level measurements at extremely low levels below -101 dBm. However, the following optional ultra-low-level measurement procedure is provided for users choosing to verify the lower level outputs directly.

Ultra-Low Level Test Points (steps 27-34)

If required, use the following optional procedure to verify the absolute level accuracy of the UUT below -101 dBm.

Note

Ultra-low-level measurements are made relative to levels previously measured with the Measuring Receiver. Two levels (-81 dBm and -91 dBm) are used as reference points to provide the required UUT hardware configurations for the subsequent tests. The value of the output level at -81 dBm and -91 dBm measured in steps 30 through 37 above will be used as references in the following procedure, identified as P_{-81} and P_{-91} respectively for each test frequency. It is important that the correct sequence is followed as described.

Making these precision ultra-low-level measurements requires appropriate choice of Measuring Receiver settings to provide adequate linearity, noise floor, and reading repeatability throughout the amplitude range required. For any given frequency the Measuring Receiver the settings must be maintained for all amplitudes at that frequency after establishing the reference point. In particular, receiver attenuator, reference level, and resolution bandwidth settings must not change.

27. On the UUT enable the REF FREQUENCY OUTPUT at 10 MHz and set the UUT as follows:

Frequency	10 MHz
Level	-81 dBm
Output	OPER

28. Allow the Measuring Receiver to tune the input signal, and then set the controls to measure RF level, relative (dB) to the current input level.
29. Without changing any Measuring Receiver settings, set the UUT to the next amplitude listed in Table 3-21 for this frequency. Allow the Measuring Receiver reading to stabilize and record the reading as P_{rel}. (Note that P_{rel} will be a negative number in dB).
30. Calculate the UUT output $P_{out} = P_{-81} + P_{rel}$. Check that the value of P_{out} is within the tolerance shown in part A of Table 3-21.
31. Repeat steps 30 and 31 for each amplitude listed in part A of Table 3-21 for this frequency.

32. Return the UUT output to -81dBm, set the UUT frequency to the next frequency listed in part A of Table 3-21, and repeat steps 29 through 32.
33. Set the UUT to 10 MHz at -91dBm. Repeat steps 39 through 43 for the points listed in part B of Table 3-21 using the calculation $P_{out} = P_{-91} + P_{rel}$ in step 30.
34. Set the UUT to STBY.

Table 3-21. 75 Ω Leveling Head Optional Ultra-Low Level Accuracy Test (96040A and 96270A)

Part	Frequency	Amplitude	Reading	P_{out} Tolerance
A	10 MHz	-81 dBm	Reference	Reference
		-101dBm	P_{rel}	±1.50 dB
		-121dBm	P_{rel}	±1.50 dB
	100 MHz	-81 dBm	Reference	Reference
		-101dBm	P_{rel}	±1.50 dB
		-121dBm	P_{rel}	±1.50 dB
	300 MHz	-81 dBm	Reference	Reference
		-101dBm	P_{rel}	±1.50 dB
		-121dBm	P_{rel}	±1.50 dB
	1.4 GHz	-81 dBm	Reference	Reference
		-101dBm	P_{rel}	±1.50 dB
		-121dBm	P_{rel}	±1.50 dB
	2 GHz	-81 dBm	Reference	Reference
		-101dBm	P_{rel}	±1.50 dB
		-121dBm	P_{rel}	±1.50 dB
B	10 MHz	-91 dBm	Reference	Reference
		-111 dBm	P_{rel}	±1.50 dB
	100 MHz	-91 dBm	Reference	Reference
		-111 dBm	P_{rel}	±1.50 dB
	300 MHz	-91 dBm	Reference	Reference
		-111 dBm	P_{rel}	±1.50 dB
	1.4 GHz	-91 dBm	Reference	Reference
		-111 dBm	P_{rel}	±1.50 dB
	2 GHz	-91 dBm	Reference	Reference
		-111 dBm	P_{rel}	±1.50 dB

Attenuation Accuracy – 75 Ω Leveling Head (Optional, 96040A and 96270A)

Equipment required for this test:

- Measuring Receiver
- Precision Adapter, Type-N female-to-female, 75 Ω
- Attenuator, 6 dB, 50 Ω, N-Type
- 75 Ω to 50 Ω impedance-matching pad
- 75 Ω Leveling Head (supplied with UUT)

Note

In the subsequent tests, the tolerances shown refer to specifications listed in Chapter 1, Specifications *of this manual. In some cases the test limits must be altered due to the uncertainty of the actual equipment used. For example, if the Instrument specification is ±0.025 dB and the Measuring Receiver uncertainty is ±(0.015 dB + 0.005 dB per 10 dB step) the test limit for 18 dB would be ±0.035 dB (the root-sum-square of 0.025 and 0.024).*

To verify the attenuation accuracy of the UUT output relative to +16 dBm, 75 Ω:

1. Connect the 75 Ω Leveling Head to the RF INPUT of the Measuring Receiver via a 75 Ω to 50 Ω impedance-matching pad and 6 dB attenuator. Connect the REF FREQUENCY OUTPUT (rear panel) from the UUT to the Spectrum Analyzer Ext Ref In (on rear). See Figure 3-13 for equipment connections.

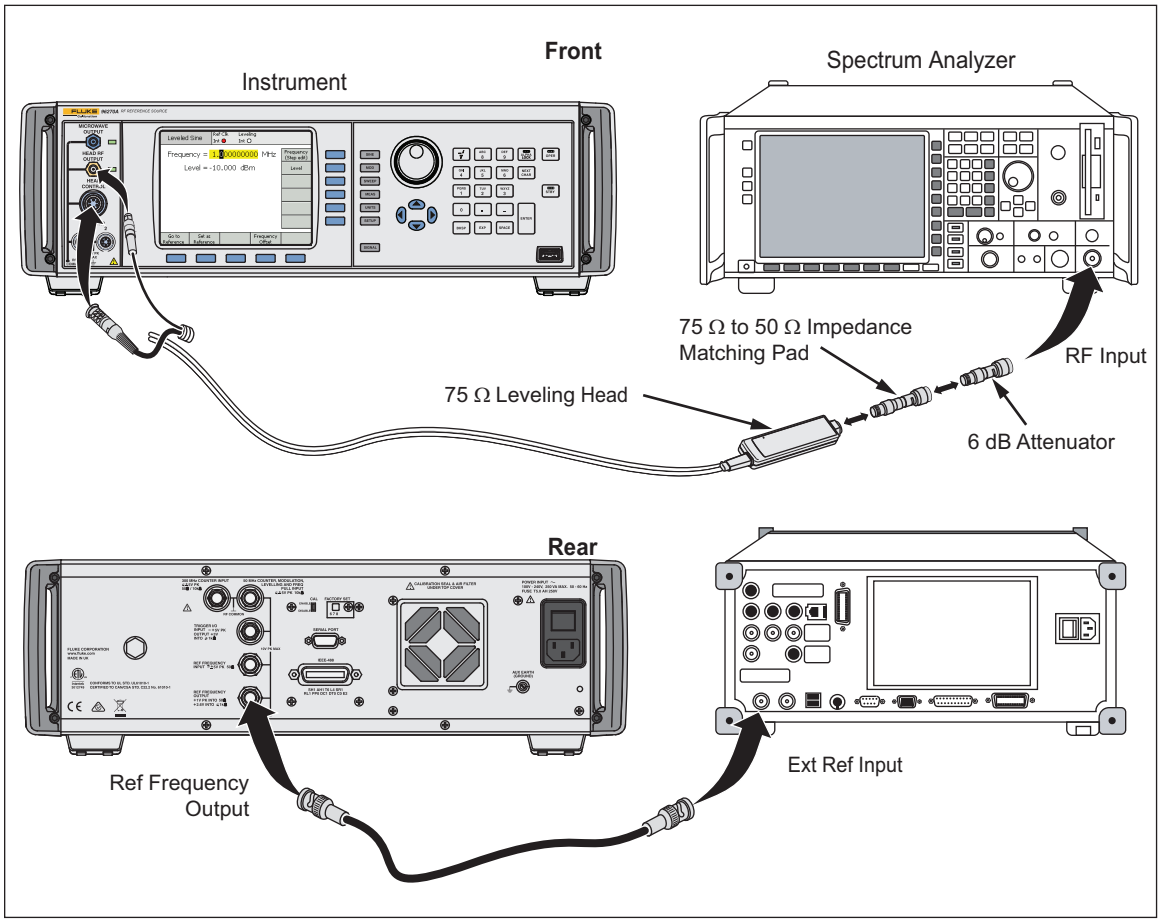

Figure 3-13. Equipment Connections - Attenuation Accuracy Test 75 Ω Leveling Head (96040A and 96270A)

Note

The 6 dB attenuator minimizes mismatch errors. Additional attenuation may be required to satisfy alternative Measuring Receiver maximum input limitations.

Note

Unwanted interference from signals at 10 MHz due to the frequency reference outputs of equipment operating in the vicinity of the test setup or the equipment used during the tests can cause erroneous results. To avoid such problems, add a small offset (50 kHz) to the listed nominal test frequency.

2. On the UUT enable the REF FREQUENCY OUTPUT, set the UUT as follows:

Note

For the 96270A, ensure the Leveling Head output is selected.

Signal	Leveling Head Output
Frequency	50 MHz
Level	+10 dBm
Output	OPER

3. Allow the Measuring Receiver to tune the input signal, and then set the controls to measure RF level, relative (dB) to the current input level.
4. At each attenuation level listed in Table 3-22 allow the Measuring Receiver reading to stabilize. The indicated value is expected to be within the listed typical performance.
5. Return the UUT attenuation to 0 dB (+10 dBm).

Table 3-22. Attenuation Accuracy Test - 75 Ω Leveling Head (96040A and 96270A)

Nominal Attenuation	Absolute Output Level	Specification
0 dB	---	Reference
-3 dB		± 0.07 dB
-13 dB		± 0.07 dB
-23 dB		± 0.07 dB
-33 dB		± 0.07 dB
-43 dB		± 0.1 dB
-53 dB		± 0.1 dB
-63 dB		± 0.1 dB
-73 dB		± 0.2 dB
-82 dB		± 0.2 dB
-91 dB		± 0.2 dB
-101 dB		± 0.4 dB (Typ)

6. Repeat steps 2 through 5 at the attenuation levels shown in Table 3-22 for frequency of 50 MHz.
7. Set the UUT to STBY.
8. Disconnect the 75 Ω Leveling Head, 75 Ω to 50 Ω impedance-matching pad and 6 dB attenuator from the Measuring Receiver.

VSWR Test – 75 Ω (Optional)

Equipment Required for this Test:

- Signal Source, 75 Ω
- Spectrum Analyzer
- 75 Ω to 50 Ω impedance-matching pad
- 75 Ω directional bridge
- Precision 75 Ω Open termination
- Precision 75 Ω Short termination
- 75 Ω Leveling Head (supplied with UUT)

To verify the UUT's output VSWR using a directional bridge and a Spectrum Analyzer:

1. Connect the REF FREQUENCY OUTPUT (rear panel) from the UUT to the Spectrum Analyzer and signal generator external reference inputs using a BNC tee and BNC male – male cable assemblies. Set the Spectrum Analyzer and signal generator for external frequency reference.
2. On the UUT enable the REF FREQUENCY OUTPUT at 10 MHz. Ensure the Spectrum Analyzer and signal generator external reference frequency inputs are enabled for input at 10 MHz.
3. Connect the signal generator RF output to the input port of the directional bridge. Connect the directional bridge coupled (output) port to the Spectrum Analyzer input using a 75 Ω to 50 Ω impedance-matching pad. See Figure 3-14.

Note

To determine the reference level setting of the Spectrum Analyzer, the UUT must initially be connected to the directional bridge.

4. Connect the UUT to the test port of the directional bridge.
5. Set the Spectrum Analyzer as follows:

PRESET	
EXT REF	On
REF LVL	+10 dBm
FREQ	500 MHz
SPAN	Zero Span

6. Set the signal generator as follows:

Frequency	500.00001 MHz
Amplitude	0 dBm
Output	On

7. Set the UUT as follows:

Note

For the 96270A, ensure the Leveling Head output is selected.

Signal	Leveling Head Output
Frequency	500 MHz
Level	+7 dBm
Output	OPER

8. Adjust the Spectrum Analyzer reference level to place the displayed trace approximately 3 dB below the reference level line.
9. Set the UUT to STBY and disconnect it from the directional bridge. Connect the open (75 Ω) termination to the directional bridge test port.
10. Set the Spectrum Analyzer display units to volts and perform a peak search. Note the marker indication with the test port open.
11. Connect a Type-N short to the directional bridge test port. Perform a peak search with the test port shorted and note the marker indication. Remove the short.

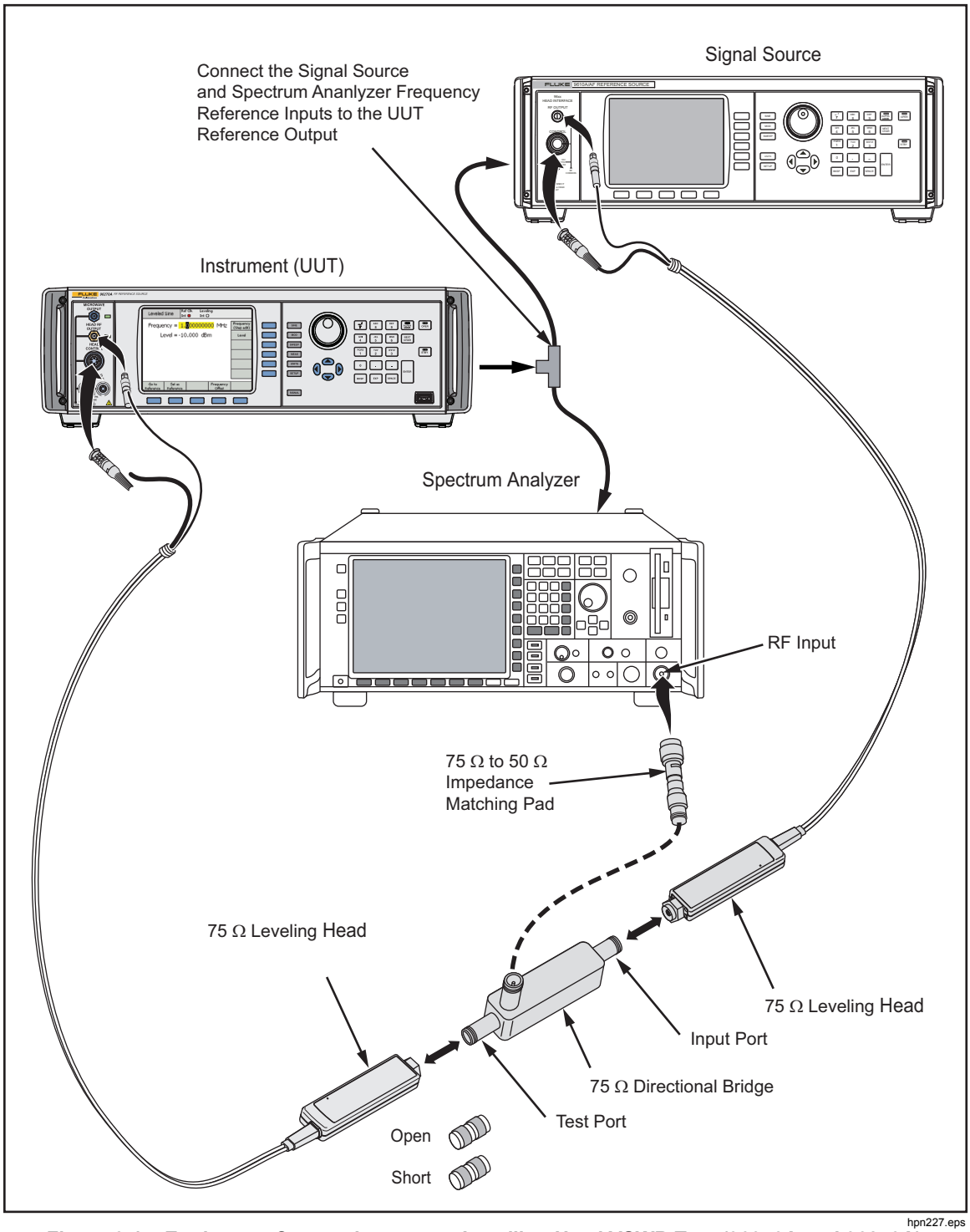

Figure 3-14. Equipment Connections - 75 Ω Levelling Head VSWR Test (96040A and 96270A)

12. Compute the average of the values measured with the test port open and shorted. Record this number as Z_{Max} for the test frequency of 500 MHz.

13. Repeat steps 6 through 12 for the next test frequency at +7 dBm listed in Table 3-23, setting the Spectrum Analyzer center frequency to the test frequency and recording Z_{Max} for each test frequency.
14. Reconnect the directional bridge test port to the UUT and set it to OPER.
15. Set the Spectrum Analyzer display to linear. Set the sweep time to 5 ms, single sweep.
16. Set the UUT frequency to 500 MHz, set the signal generator frequency to 500.00001 MHz, and set the Spectrum Analyzer center frequency to 500 MHz.
17. Initiate a single sweep. Allow the sweep to complete then perform a (maximum) peak search. Note the marker amplitude.
18. Perform a (minimum) search and note the marker amplitude.
19. Calculate the difference of the maximum and minimum searches, dividing the difference by 2 to determine the peak value. Record this number as $Z_{UUT.}$
20. Compute the voltage reflection coefficient using the following formula:

$$\rho_{\ell} = \frac{Z_{UUT}}{Z_{Max}}$$

21. Using the following formula, calculate the UUT VSWR. The calculated value must be <1.1.

$$VSWR = \frac{1 + \rho_{\ell}}{1 - \rho_{\ell}}$$

22. Repeat steps 16 through 21 for the remaining test frequencies and maximum VSWR values in Table 3-23, setting the Spectrum Analyzer center frequency in step 15 to the test frequency.
23. Repeat steps 4 through 22 for the remaining UUT output levels and maximum VSWR values in Table 3-23.
24. Set the UUT to STBY.

Table 3-23. VSWR Test (75 Ω)

Frequency	Level	Signal Generator Frequency	Maximum VSWR
560 MHz	+7 dBm	500.000 01 MHz	<1.1
1 GHz		1.000 000 01 GHz	<1.2
560 MHz	-3 dBm	500.000 01 MHz	<1.1
1 GHz		1.000 000 01 GHz	<1.2
2 GHz		2.000 000 01 GHz	<1.3
560 MHz	-13 dBm	500.000 01 MHz	<1.1
1 GHz		1.000 000 01 GHz	<1.2
2 GHz		2.000 000 01 GHz	<1.3

Microwave Output Level Accuracy (96270A, Optional Functional Test)

Equipment required for this test:

- AC Measurement Standard
- Precision 50 Ω feedthrough termination
- 50 Ω Type-N female-to-BNC male adapter
- Power Meter
- Power Sensor, Thermal, 27 GHz, 50 Ω
- Precision Adapter, Type-N female-to-female, 50 Ω
- Spectrum Analyzer/Measuring Receiver

The performance of the Microwave output has typical (not guaranteed) specifications. It is tested for functionality only as it is intended for delivery of signals to the HF Leveling Kit sensor/splitter combination which provides the level accuracy or use where signal purity is required and level accuracy is unimportant. Therefore, this test is not mandatory.

To perform a functional test of the UUT Microwave Output level accuracy:

Note

The microwave output level accuracy specifications are quoted as typical only and are not warranted. However, these typical specifications can be used as an indication of expected performance for this functional test and are listed for reference in the subsequent tables in this procedure and the test record forms. Results greater than twice the expected typical performance specification limits may require further confirmation and investigation.

Test points at levels <+3 dBm depend on the Low Level Microwave Output option configuration of the Product, as noted in the test point tables shown in the subsequent parts of this procedure.

The procedure makes use of an ac measurement standard, followed by a Power Meter and sensors, and finally, a Spectrum Analyzer/Measuring Receiver. At various points within the process values previously measured using one reference device are required for subsequent use with another device. It is recommended that users familiarize themselves with the entire absolute-level accuracy test procedure before commencing.

Note

Unwanted interference from signals at 10 MHz due to the frequency reference outputs of equipment operating in the vicinity of the test setup or the equipment used during the tests can cause erroneous results. To avoid such problems, when test frequencies are from 10 MHz to 300 MHz, add a small offset (50 kHz) to the nominal frequency if the test frequency is a multiple of 10 MHz.

1. Connect the UUT Microwave Output to the INPUT 1 connector on the ac measurement standard using a cable and precision 50 Ω feedthrough termination located at the ac measurement standard input. (If a Type-N feedthrough termination is not available, use a BNC 50 Ω feedthrough termination and appropriate adapters. Ensure that BNC connector contact resistance and repeatability does not significantly degrade measurement uncertainty). Select INPUT 1. See Figure 3-15. Microwave Output Level Accuracy Tests, Low Frequency Points Connections for equipment connections.

Note

Use a common mode choke to obtain satisfactory noise performance and accurate readings. Insert the common mode choke in series between the feedthrough termination and the AC Measurement Standard input, with the ground applied at the choke input. Keep the ground connection as short as possible and set the AC Measurement Standard to Internal Guard. A common mode choke of 250 µH is usually effective. A suitable choke is 6 turns of small-diameter coaxial cable through a TDK toroid, manufacturer's part no. H5C2-T28-13-16 (available as Fluke part no. 474908) Refer to the 5970A Operator Manual for additional explanation.

Note

Measurements made on the 5790A 2.2 mV range (at levels below -40 dBm) require correction for the 2.2 mV range linearity error.

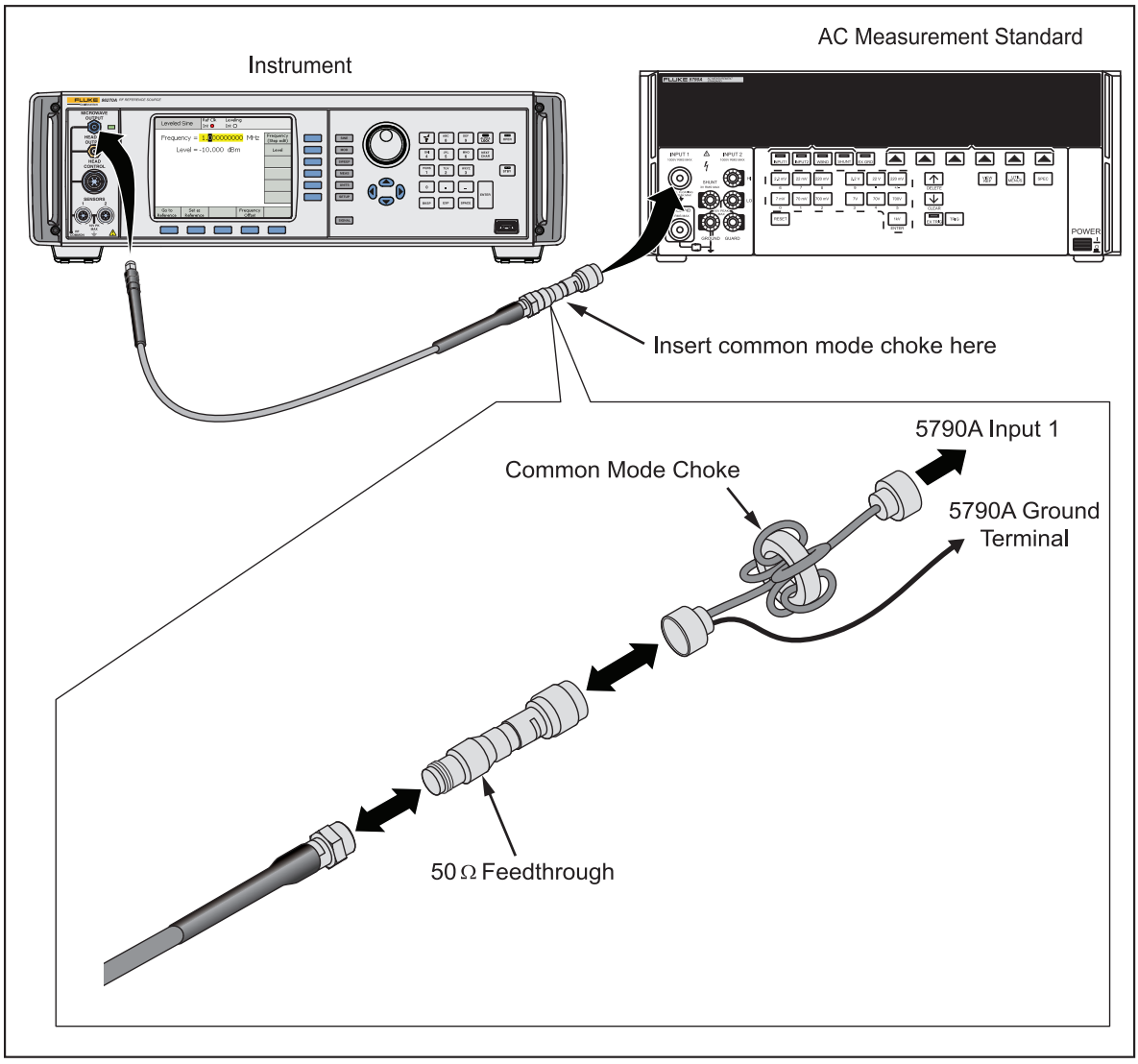

Figure 3-15. Microwave Output Level Accuracy Tests, Low Frequency Points Connections

2. Set the UUT as follows:

Mode	Leveled Sine
Signal	Microwave Output
Frequency	1 kHz
Level	+13 dBm
Output	OPER

3. Allow the ac measurement standard to make several measurements and the reading to settle. Convert the settled reading from V rms to dBm using the following formula:

$$\text{dBm (50 }\Omega) = 10Log_{10}\left(\frac{V^2}{50\times 0.001}\right)$$

The result must be within the tolerance listed in Table 3-24.

4. Set the UUT output to the next frequency listed in Table 3-24 for this test amplitude.
5. Repeat step 3 and confirm that the measured output level is consistent with the typical performance shown in Table 3-24.
6. When the test frequency is 100 kHz, record the measured level in dBm as P_1 for use later in this procedure.
7. Repeat steps 2 through 7 for the next test amplitude listed in Table 3-24 for the relevant UUT Low Level Microwave Output option configuration, applying the 5790A 2.2 mV range linearity error correction at levels below -40 dBm.

Table 3-24. Microwave Output Level Accuracy Test, Low Frequency Test Points

Low Level Microwave Output Option?	Amplitude	Frequency	Typical Tolerance
All UUT configurations	+13 dBm	1 kHz	±0.5 dB
		100 kHz (P_1)	±0.5 dB
	+3 dBm	1 kHz	±0.5 dB
		100 kHz (P_1)	±0.5 dB
Non-Low Level MW O/P Option only	-4 dBm	1 kHz	±0.5 dB
		100 kHz (P_1)	±0.5 dB
Low Level Microwave Output Option only	-7 dBm	1 kHz	±2.0 dB
		100 kHz	±2.0 dB
	-17 dBm	1 kHz	±2.0 dB
		100 kHz	±2.0 dB
	-27 dBm	1 kHz	±2.0 dB
		100 kHz (P_1)	±2.0 dB
	-37 dBm	1 kHz	±2.0 dB
		100 kHz (P_1)	±2.0 dB
	-47 dBm	1 kHz	±2.0 dB
		100 kHz (P_1)	±2.0 dB

8. Connect the thermal Power Sensor RF input directly to the UUT front panel Microwave Output connector. See Figure 3-16 for equipment connections.

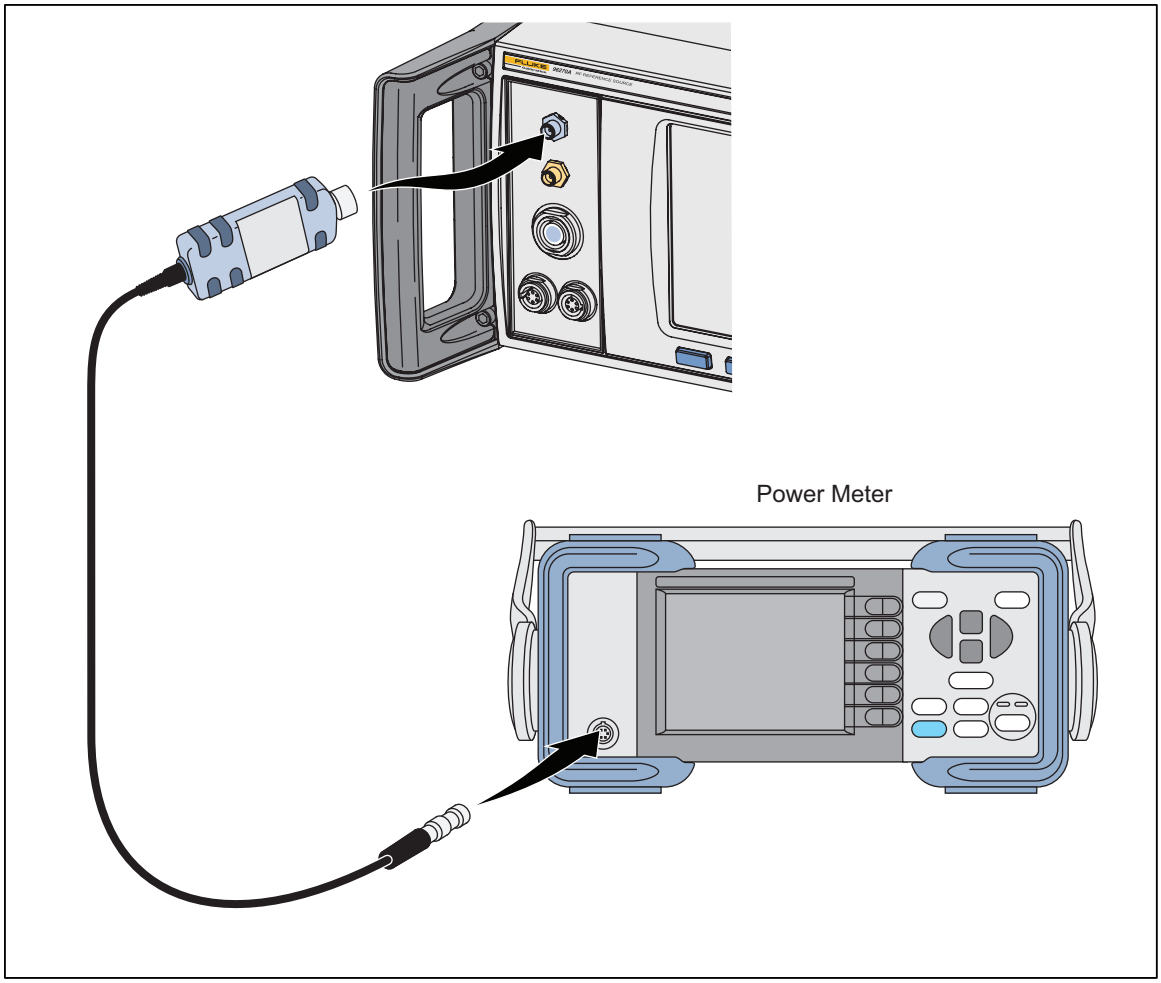

Figure 3-16. Microwave Output Level Accuracy Tests, High Frequency Points

9. Set the UUT as follows:

Mode	Leveled Sine
Signal	Microwave Output
Frequency	100 kHz
Level	+13 dBm
Output	OPER

10. Configure the Power Meter to indicate readings in dBm. Enter the measurement frequency (0.1 MHz) into the Power Meter to enable cal factor (frequency) correction.

Note

The recommended Power Meter has Power Sensor calibration factors stored internally in the sensor. Setting the input frequency in the Power Meter automatically selects the appropriate cal factor for the measurement. However, the Power Sensor may also be accompanied by a table of calibration factors which must be applied externally.

11. Allow the Power Meter reading to settle. Record the measured level in dBm as P_2 for use later in this procedure.

Note

The Power Meter autorange boundary may coincide with a measurement point. To avoid unwanted Power Meter autoranging, manually lock the Power Meter range once the 100 kHz reading is obtained and maintain the Power Meter range lock for all subsequent frequencies at this amplitude.

12. Set the UUT frequency to the first test frequency listed in Table 3-25.
13. Enter the measurement frequency into the Power Meter and allow the Power Meter reading to settle. Record the measured level in dBm as P_3 . Calculate the UUT output $P_{out} = P_1 + (P_3 – P_2)$.
14. Check that the value of P_{out} is consistent with the typical performance shown in Table 3-25.

Note

If a Power Sensor with other than the recommended 2.92 mm RF input connector is used, the insertion loss of any connector adapter must be taken into account at each measurement frequency.

15. Set the UUT to the next frequency point at this amplitude listed in Table 3-25, and repeat steps 13 through 15.

Note

The highest frequency tested is 26.4 GHz. This frequency helps prevent attempted measurements at the 26.5 GHz maximum frequency limit of the Spectrum Analyzer/Measuring Receiver used in subsequent parts of this procedure. This small frequency margin allows for any residual frequency difference errors that may otherwise take the Spectrum Analyzer/Measuring Receiver beyond its operating frequency range.

16. Set the UUT to 100 kHz at the next amplitude listed in Table 3-25, and repeat steps 11 through 15. For instruments fitted with the Low-level Microwave Output option, when the test amplitude is -7 dBm at each frequency, record the value of P_{out} at -7 dBm as P_{-7}. These values will be used later in this procedure.
17. Set the UUT output to STBY. This concludes testing for UUTs not fitted with the Low-level Microwave Output option.

Table 3-25. Microwave Output Level Accuracy Test, High Frequency Test Points

Low Level Microwave Output Option?	Amplitude	Frequency	Reading	P_{out} Typical Tolerance
All UUT configurations	+13 dBm	100 kHz	P_2	Reference
		10 MHz	P_3	±0.5 dB
		100 MHz	P_3	±0.5 dB
		1 GHz	P_3	±0.5 dB
		4.024 GHz	P_3	±1.0 dB
		10 GHz	P_3	±1.0 dB
		15 GHz	P_3	±1.0 dB
		20 GHz	P_3	±1.0 dB
		26.4 GHz	P_3	±1.0 dB
	+3 dBm	100 kHz	P_2	Reference
		10 MHz	P_3	±0.5 dB
		100 MHz	P_3	±0.5 dB
		1 GHz	P_3	±0.5 dB
		4.024 GHz	P_3	±1.0 dB
		10 GHz	P_3	±1.0 dB
		15 GHz	P_3	±1.0 dB
		20 GHz	P_3	±1.0 dB
		26.4 GHz	P_3	±1.0 dB
Non-Low Level MW O/P Option only	-4 dBm	100 kHz	P_2	Reference
		10 MHz	P_3	±0.5 dB
		100 MHz	P_3	±0.5 dB
		1 GHz	P_3	±0.5 dB
		4.024 GHz	P_3	±1.0 dB
		10 GHz	P_3	±1.0 dB
		15 GHz	P_3	±1.0 dB
		20 GHz	P_3	±1.0 dB
		26.4 GHz	P_3	±1.0 dB
Low Level Microwave Output Option only	-7 dBm	100 kHz	P_2	Reference
		10 MHz	P_3	±2.0 dB
		100 MHz	P_3	±2.0 dB
		1 GHz	P_3	±2.0 dB
		4.024 GHz	P_3	±2.0 dB
		10 GHz	P_3	±2.0 dB
		15 GHz	P_3	±2.0 dB
		20 GHz	P_3	±2.0 dB
		26.4 GHz	P_3	±2.0 dB

18. The subsequent steps apply only to UUTs fitted with the Low-Level Microwave output option.
19. Connect the UUT Microwave Output to the RF INPUT of the Spectrum Analyzer/Measuring Receiver and connect the REF FREQUENCY OUTPUT (rear panel) from the UUT to the Spectrum Analyzer Ext Ref In (on rear). See Figure 3-17 for equipment connections.

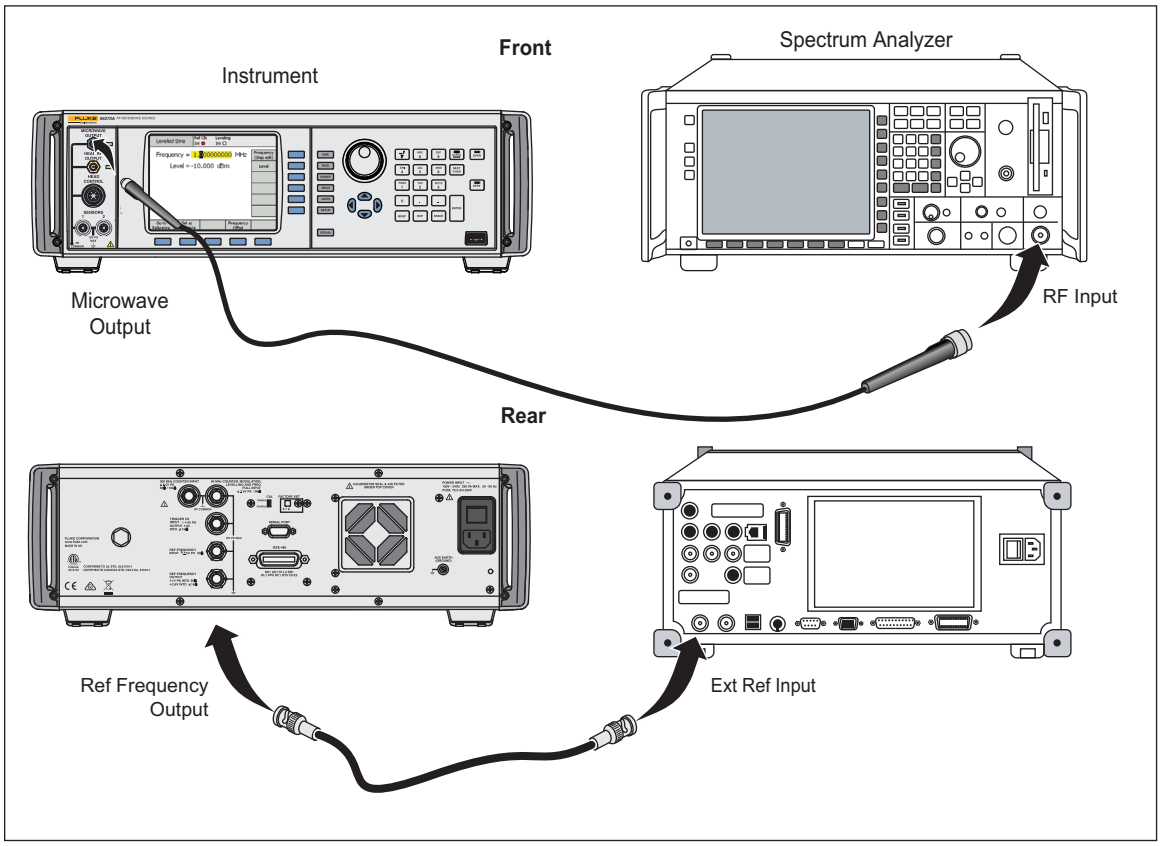

Figure 3-17. Microwave Output Level Accuracy Tests, Low-level Points (Low-level Microwave Output option only)

Note

Low-level measurements are made with a Spectrum Analyzer/Measuring Receiver, relative to levels previously measured with the Power Sensor. Two levels (-7dBm and -37 dBm) are used as reference points for the subsequent tests in this part of the procedure. It is important that the correct sequence is followed as described.

Making these precision low-level measurements requires appropriate choice of Spectrum Analyzer/Measuring Receiver settings to provide adequate linearity, noise floor, and reading repeatability throughout the amplitude range required. For any given frequency the Spectrum Analyzer/Measuring Receiver the settings must be maintained for all amplitudes at that frequency after establishing the reference point. In particular, receiver attenuator, reference level, and resolution bandwidth settings must not change.

20. On the UUT enable the REF FREQUENCY OUTPUT at 10 MHz and set the UUT as follows:

Frequency	100 kHz
Level	-7 dBm
Output	OPER

21. Allow the Spectrum Analyzer/Measuring Receiver to tune the input signal, and then set the controls to measure RF level, relative (dB) to the current input level.
22. Without changing any Spectrum Analyzer/Measuring Receiver settings, set the UUT to the next amplitude listed in Table 3-26 for this frequency. Allow the Measuring Receiver reading to stabilize and record the reading as P_{rel}. (Note that P_{rel} will be a negative number in dB).
23. Calculate the UUT output $P_{out} = P_{-7} + P_{rel}$. Check that the value of P_{out} is consistent with the typical performance shown in part A of Table 3-26.
24. Repeat steps 22 and 23 for each amplitude listed in part A of Table 3-26 for this frequency.
25. Return the UUT output to -7 dBm, set the UUT frequency to the next frequency listed in part A of Table 3-26, and repeat steps 21 through 25.
26. Set the UUT to 100 kHz at -37 dBm. Repeat steps 21 through 26 for the points listed in part B of Table 3-27 using the calculation $P_{out} = P_{-37} + P_{rel}$ in step 23.
27. Set the UUT to STBY.

Table 3-26. Microwave Output Level Accuracy Test, Additional Low Level Test Points, Part A

Part	Frequency	Amplitude	Reading	P_{out} Tolerance
A Low Level Microwave Output Option only	10 MHz	-7 dBm	Reference	Reference
		-17 dBm	P_{rel}	±2.0 dB
		-27 dBm	P_{rel}	±2.0 dB
		-37 dBm (P_{-37})	P_{rel}	±2.0 dB
	100 MHz	-7 dBm	Reference	Reference
		-17 dBm	P_{rel}	±2.0 dB
		-27 dBm	P_{rel}	±2.0 dB
		-37 dBm (P_{-37})	P_{rel}	±2.0 dB
	1 GHz	-7 dBm	Reference	Reference
		-17 dBm	P_{rel}	±2.0 dB
		-27 dBm	P_{rel}	±2.0 dB
		-37 dBm (P_{-37})	P_{rel}	±2.0 dB
	4.024 GHz	-7 dBm	Reference	Reference
		-17 dBm	P_{rel}	±2.0 dB
		-27 dBm	P_{rel}	±2.0 dB
		-37 dBm (P_{-37})	P_{rel}	±2.0 dB
	10 GHz	-7 dBm	Reference	Reference
		-17 dBm	P_{rel}	±2.0 dB
		-27 dBm	P_{rel}	±2.0 dB
		-37 dBm (P_{-37})	P_{rel}	±2.0 dB
	20 GHz	-7 dBm	Reference	Reference
		-17 dBm	P_{rel}	±2.0 dB
		-27 dBm	P_{rel}	±2.0 dB
		-37 dBm (P_{-37})	P_{rel}	±2.0 dB
	26.4 GHz	-7 dBm	Reference	Reference
		-17 dBm	P_{rel}	±2.0 dB
		-27 dBm	P_{rel}	±2.0 dB
		-37 dBm (P_{-37})	P_{rel}	±2.0 dB

Table 3-27. Microwave Output Level Accuracy Test, Additional Low Level Test Points, Part B

Part	Frequency	Amplitude	Reading	P_{out} Tolerance
B Low Level Microwave Output Option only	100 kHz	-37 dBm	Reference	Reference
		-57 dBm	P_{rel}	±2.0 dB
		-66 dBm	P_{rel}	±2.0 dB
		-75 dBm	P_{rel}	±2.0 dB
		-85 dBm	P_{rel}	±2.0 dB
	10 MHz	-37 dBm	Reference	Reference
		-47 dBm	P_{rel}	±2.0 dB
		-57 dBm	P_{rel}	±2.0 dB
		-66 dBm	P_{rel}	±2.0 dB
		-75 dBm	P_{rel}	±2.0 dB
		-85 dBm	P_{rel}	±2.0 dB
	100 MHz	-37 dBm	Reference	Reference
		-47 dBm	P_{rel}	±2.0 dB
		-57 dBm	P_{rel}	±2.0 dB
		-66 dBm	P_{rel}	±2.0 dB
		-75 dBm	P_{rel}	±2.0 dB
		-85 dBm	P_{rel}	±2.0 dB
	1 GHz	-37 dBm	Reference	Reference
		-47 dBm	P_{rel}	±2.0 dB
		-57 dBm	P_{rel}	±2.0 dB
		-66 dBm	P_{rel}	±2.0 dB
		-75 dBm	P_{rel}	±2.0 dB
		-85 dBm	P_{rel}	±2.0 dB
	4.024 GHz	-37 dBm	Reference	Reference
		-47 dBm	P_{rel}	±2.0 dB
		-57 dBm	P_{rel}	±2.0 dB
		-66 dBm	P_{rel}	±2.0 dB
		-75 dBm	P_{rel}	±2.0 dB
		-85 dBm	P_{rel}	±2.0 dB
	10 GHz	-37 dBm	Reference	Reference
		-47 dBm	P_{rel}	±2.0 dB
		-57 dBm	P_{rel}	±2.0 dB
		-66 dBm	P_{rel}	±2.0 dB

Part	Frequency	Amplitude	Reading	P_{out} Tolerance
		-75 dBm	P_{rel}	±2.0 dB
		-85 dBm	P_{rel}	±2.0 dB
	20 GHz	-37 dBm	Reference	Reference
		-47 dBm	P_{rel}	±2.0 dB
		-57 dBm	P_{rel}	±2.0 dB
		-66 dBm	P_{rel}	±2.0 dB
		-75 dBm	P_{rel}	±2.0 dB
		-85 dBm	P_{rel}	±2.0 dB
	26.4 GHz	-37 dBm	Reference	Reference
		-47 dBm	P_{rel}	±2.0 dB
		-57 dBm	P_{rel}	±2.0 dB
		-66 dBm	P_{rel}	±2.0 dB
		-75 dBm	P_{rel}	±2.0 dB
		-85 dBm	P_{rel}	±2.0 dB

Microwave Output Frequency Accuracy (96270A only)

Equipment required for this test:

- Frequency Counter
- Spectrum Analyzer
- Frequency Standard

Use the following procedure to verify the accuracy of the output frequency developed by the UUT:

1. Warm up the UUT (continuous operation) for 24 hours, minimum.
2. Connect the 10 MHz output from the frequency standard to the EXT REF IN on the frequency counter (rear panel) using a BNC male – male cable assembly. Set the frequency counter for external time base reference.
3. Connect the UUT Microwave output to the Channel A input of the frequency counter. See Figure 3-18 for equipment connections.

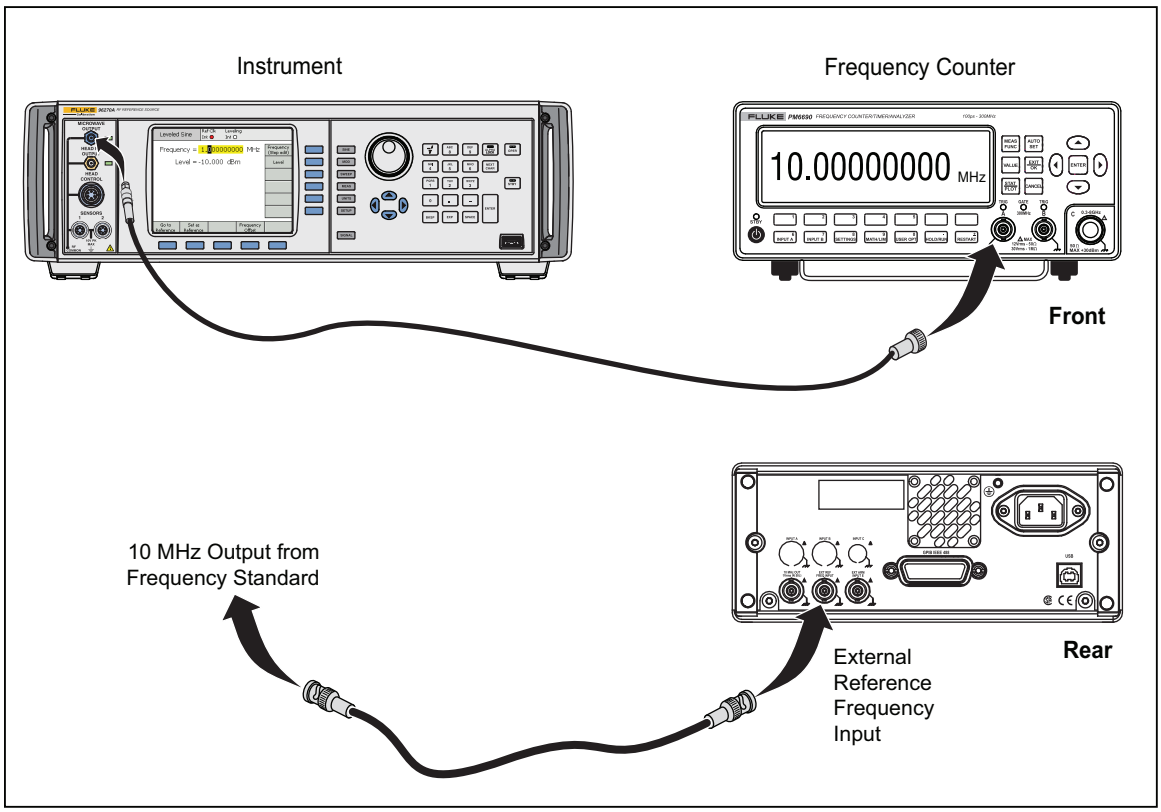

Figure 3-18. Equipment Connections - Microwave Output Frequency Accuracy Test Part A

4. Set the UUT as follows:

Ref Frequency Input	Disabled
Mode	Leveled Sine
Signal	Microwave Output
Ref Frequency Input	Disabled
Frequency	10 kHz
Level	+13 dBm
Output	OPER

5. Set the frequency counter as follows:

Function	Freq A
Slope	Positive
Coupling	AC
Input Impedance	50 Ω
Attenuation	1x
Trigger Mode	Auto

6. Set the output frequency of the UUT to each of the frequencies listed in part A of Table 3-28. At each frequency allow the frequency counter to take several readings and settle; the settled reading must be within the tolerance shown. At 1 GHz connect the UUT Microwave output to the counter channel C input and select the counter Freq C function.
7. Set the UUT output to STBY. Remove all connections to the frequency counter.

Table 3-28. Frequency Accuracy Test – Microwave Output

Part	UUT Frequency	Tolerance
A	10 MHz	9.999 999 500 – 10.000 000 500 MHz
	1 GHz	0.999 999 950 0 – 1.000 000 050 0 MHz
B	5 GHz	4.999 999 750 0 – 5.000 000 250 0 MHz
	6.036 GHz	6.035 999 698 2 – 6.036 000 301 8 MHz
	8.048 GHz	8.047 999 597 6 – 8.048 000 402 4 MHz
	9.52 GHz	9.519 999 524 0 – 9.520 000 476 0 MHz
	10 GHz	9.999 999 500 0 – 10.000 000 500 0 GHz
	11.32 GHz	11.319 999 434 0 – 11.320 000 566 0 GHz
	12.072 GHz	12.071 999 396 4 – 12.072 00 603 6 GHz
	13.5 GHz	13.499 999 325 0 – 13.500 000 675 0 GHz
	15 GHz	14.999 999 250 0 – 15.000 000 750 0 GHz
	16 GHz	15.999 999 200 0 – 16.000 000 800 0 GHz
	18.108 GHz	18.107 999 094 6 – 18.108 000 905 4 GHz
	19.04 GHz	19.039 999 048 0 – 18.108 000 905 4 GHz
	20 GHz	19.999 999 000 0 – 20.000 001 000 0 GHz
	21.84 GHz	13.499 999 325 0 – 21.800 001 090 0 GHz
	22.64 GHz	21.799 998 910 0 – 13.500 000 675 0 GHz
	24 GHz	23.999 998 800 0 – 24.000 001 200 0 GHz
	26.5 GHz	26.499 998 675 0 – 26.500 001 325 0 GHz

8. Set the UUT output to STBY. Remove all connections to the frequency counter.
9. Connect the 10 MHz output from the frequency standard to the EXT REF IN on the spectrum analyzer (rear panel) using a BNC male – male cable assembly. Set the spectrum analyzer for external frequency reference.
10. Connect the UUT Microwave output to the input of the spectrum analyzer. See Figure 3-19 for equipment connections.

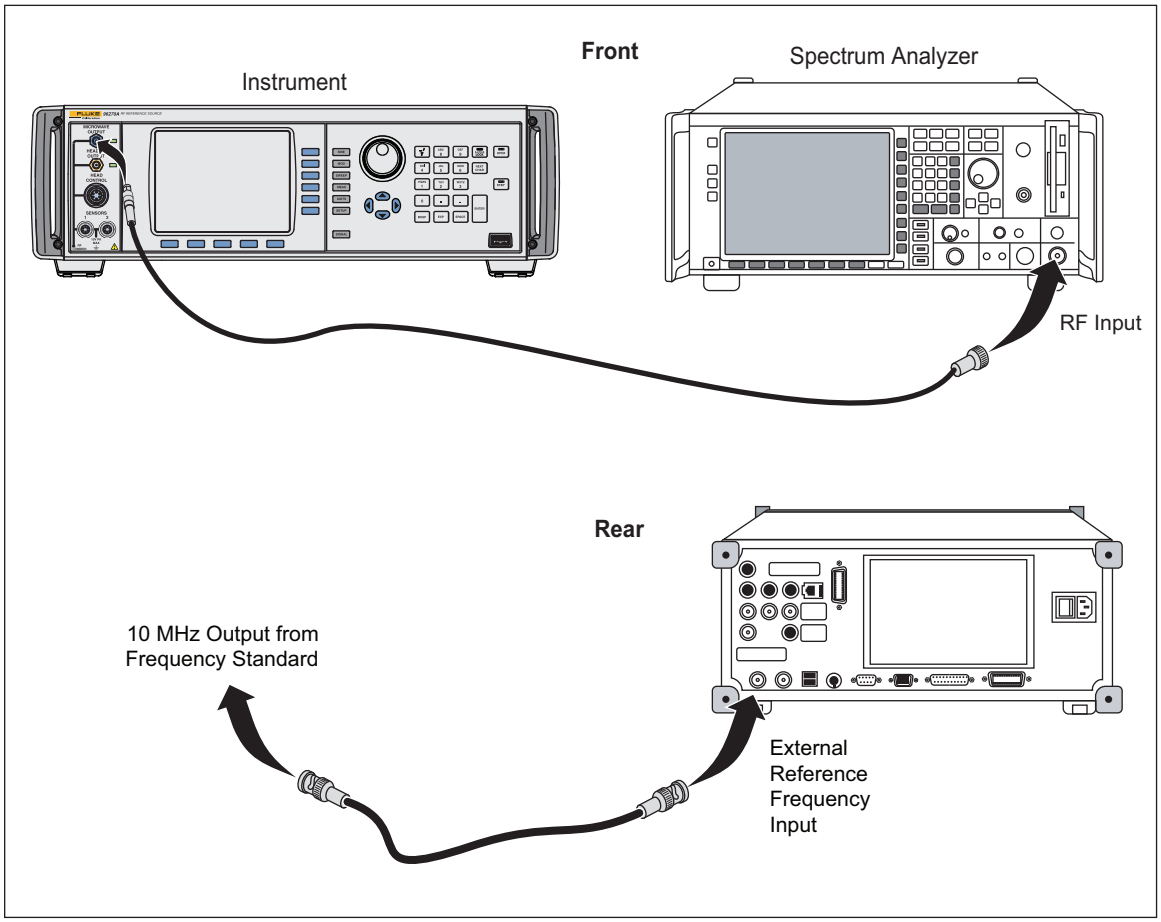

Figure 3-19. Equipment Connections - Microwave Output Frequency Accuracy Test Part B

11. Set the spectrum analyzer as follows:

PRESET	
EXT REF	On
COUPLING	DC
REF LVL	+30 dBm
FREQ	5 GHz
SPAN	50 kHz
BW	100 Hz

12. On the Spectrum Analyzer push the MKR (marker) key and then select SIGNAL COUNT from the marker menu. Push the NEXT key and select CNT RESOL 0.1HZ from the counter resolution menu.
13. Allow the Spectrum Analyzer sweep to complete. Do a marker peak search (marker to peak), then complete another sweep to obtain a signal frequency result.
14. Note the Spectrum Analyzer frequency count result and check that the frequency count value is within the tolerance listed in Table 3-28
15. Set the UUT output frequency and the spectrum analyzer center frequency to the next frequency listed in part B of Table 3-28.
16. Repeat steps 13 to 15.
17. Set the UUT output to STBY. Remove all connections.

Microwave Output Harmonics and Spurious Signal Content (96270A)

Equipment required for this test:

- Spectrum Analyzer

To verify the harmonic, sub harmonic, interharmonic, and spurious signal content of the UUT Microwave Output:

1. Connect the UUT front panel Microwave Output to the RF INPUT of the Spectrum Analyzer.
2. Connect the REF FREQUENCY OUTPUT (rear panel) from the UUT to the Spectrum Analyzer Ext Ref In (on rear). See Figure 3-20 for equipment connections.
3. On the UUT enable the REF FREQUENCY OUTPUT at 10 MHz.
4. Set the spectrum analyzer as follows:

PRESET	
EXT REF	On
COUPLING	DC
REF LVL	+24 dBm
FREQ	20 kHz
SPAN	100 Hz

Note

Care must be taken to ensure that signals applied to the spectrum analyzer do not exceed its input mixer's optimum operating level, causing false harmonic signal levels to be measured. It may be necessary to readjust the analyzer's RF attenuation to achieve the proper mixer input level.

5. Set the UUT as follows:

Mode	Leveled Sine
Signal	Microwave Output
Frequency	20 kHz
Level	+16 dBm
Output	OPER

6. On the Spectrum Analyzer, push MARKER → PEAK.
7. Set the spectrum analyzer as follows:

FREQ	40 kHz (2nd harmonic)

8. Using the Spectrum Analyzer delta marker functions, measure the amplitude on the Spectrum Analyzer for the UUT's 2nd harmonic relative to the fundamental. The displayed (delta marker) value must be within the limit listed in Table 3-28 for 2nd harmonic.

Note

Signal content at the required harmonic frequency may be well below the tolerance limit, and difficult to observe on the Analyzer display with the above settings. Provided the harmonic signal is below the allowed limit, the test result may be recorded as "Pass". However, if it is desired to measure the actual signal level, reduce the analyzer resolution bandwidth setting and/or reduce the analyzer reference level setting. Remember to restore the analyzer reference level setting to that shown in step 4 before changing the UUT to the next fundamental output frequency, otherwise the Analyzer may be overloaded and invalid results obtained.

9. Set the Spectrum Analyzer as follows:

   FREQ 60 kHz (3rd harmonic)

   MARKER → PEAK

10. Using the Spectrum Analyzer marker functions, measure the marker amplitude on the Spectrum Analyzer for the UUT's 3rd harmonic. The displayed (delta marker) value must be within the limit listed in Table 3-29 for 3rd harmonic.

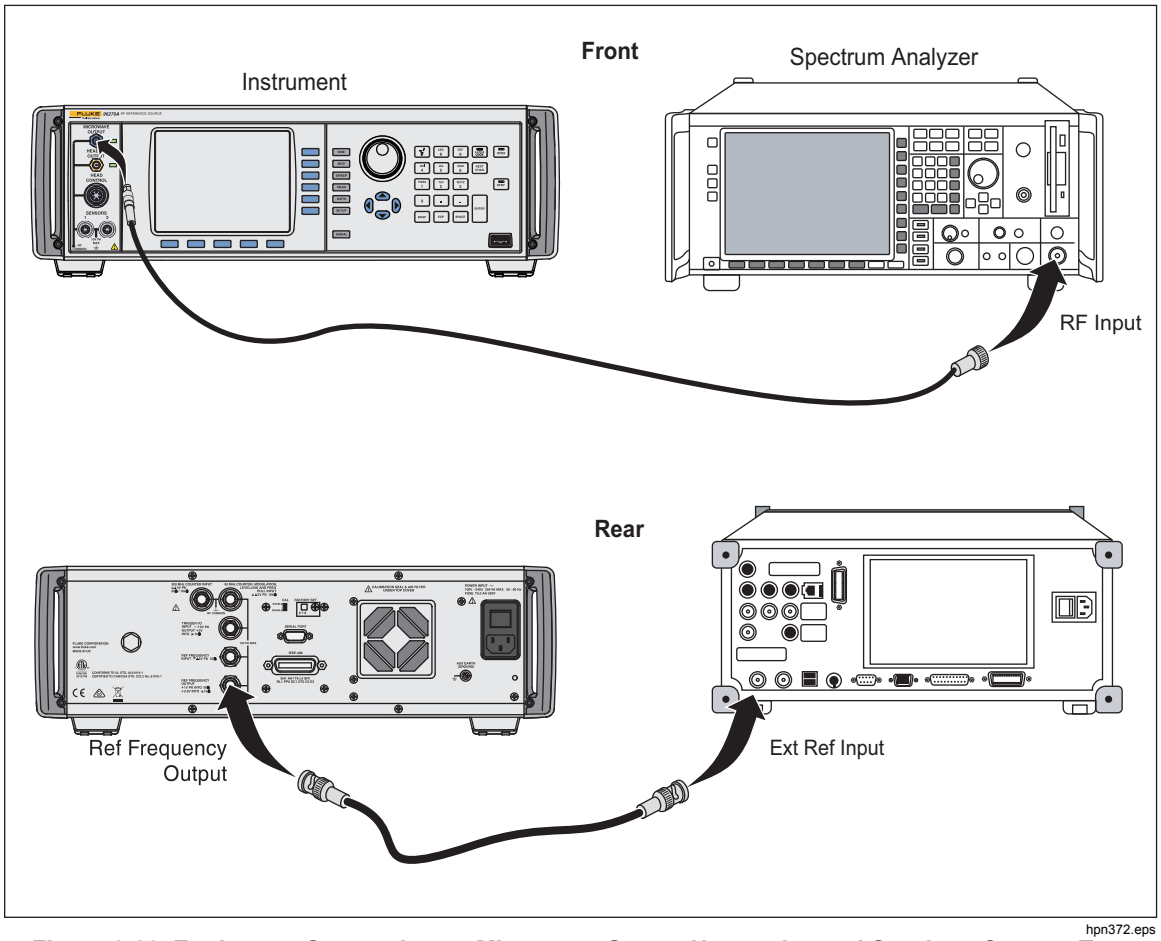

hpn372.eps

Figure 3-20. Equipment Connections – Microwave Output Harmonics and Spurious Content Test

11. Repeat steps 5 through 10 for all output and harmonic frequencies in Table 3-29, using the settings and limits shown for each.
12. Set the UUT as follows:

Frequency	4.05 GHz
Level	+16 dBm
Output	OPER

13. Set the Spectrum Analyzer as follows:

FREQ	4.05 GHz (fundamental)

14. On the Spectrum Analyzer, push MARKER → PEAK.
15. Set the Spectrum Analyzer as follows:

FREQ	6.075 GHz (interharmonic)

16. Using the Spectrum Analyzer delta marker functions, measure the amplitude on the Spectrum Analyzer for the UUT's interharmonic relative to the fundamental. The displayed (delta marker) value must be within the tolerance listed in Table 3-30 for interharmonics.

Note

Refer to the notes in steps (4) and (8) above regarding avoiding overloading the spectrum analyzer mixer and observing and measuring interharmonic signals on the analyzer display at or below the tolerance limits with the above analyzer settings.

17. Repeat steps 13 through 16 for all output, sub harmonic, and interharmonic frequencies in Table 3-30, using the settings and limits shown for each.

Table 3-29. Harmonics Test, Microwave Output

Level	Frequency	2nd Harmonic	Limit	3rd Harmonic	Limit
+16 dBm	20 kHz	40 kHz	-60 dBc	60 kHz	-60 dBc
	2.74 MHz	5.48 MHz	-60 dBc	8.22 MHz	-60 dBc
	5.5 MHz	11 MHz	-60 dBc	16.5 MHz	-60 dBc
	11 MHz	22 MHz	-60 dBc	33 MHz	-60 dBc
	22 MHz	44 MHz	-60 dBc	66 MHz	-60 dBc
	50 MHz	100 MHz	-60dBc	150 MHz	-60dBc
	88 MHz	176 MHz	-60 dBc	264 MHz	-60 dBc
	125 MHz	250 MHz	-60 dBc	375 MHz	-60 dBc
	250 MHz	250 MHz	-60 dBc	750 MHz	-60 dBc
	354 MHz	708 MHz	-60 dBc	1.062 GHz	-60 dBc
	500 MHz	1 GHz	-60 dBc	1.5 GHz	-60 dBc
	1 GHz	2 GHz	-60 dBc	3 GHz	-60 dBc
	1.25 GHz	2.5 GHz	-55 dBc	3.75 GHz	-55 dBc
	1.4 GHz	2.8 GHz	-55 dBc	4.2 GHz	-55 dBc
	1.8 GHz	2.8 GHz	-55 dBc	5.4 GHz	-55 dBc
	2 GHz	4 GHz	-55 dBc	8 GHz	-55 dBc
	2.7 GHz	5.4 GHz	-55 dBc	8.1 GHz	-55 dBc
	5 GHz	10 GHz	-55 dBc	15 GHz	-55 dBc
	9 GHz	18 GHz	-55 dBc	-	-
	10 GHz	20 GHz	-55 dBc	-	-
	12 GHz	24 GHz	-55 dBc	-	-
	13 GHz	26 GHz	-55 dBc	-	-

18. Set the Spectrum Analyzer as follows:

PRESET	
COUPLING	DC
REF LVL	+10 dBm
EXT REF	On
FREQ	4.399994 GHz
SPAN	2 MHz

19. Set the UUT as follows:

Mode	Leveled Sine
Signal	Microwave Output
Frequency	4.399994 GHz
Level	+4.6 dBm
Output	OPER

20. Set the Spectrum Analyzer to single sweep, initiate a sweep and wait for the sweep to complete. Push MARKER → PEAK.
21. Using the spectrum analyzer marker delta functions, measure the amplitude of any spurious signals detected. Verify any spurious signals at offsets >±3 kHz from the output frequency and within the range of ±1 MHz are within the listed limits.
22. Set the output frequency of the UUT and the spectrum analyzer center frequency to each of the frequencies listed in Table 3-30, repeating steps 20 and 21.
23. Set the UUT output to STBY.

Table 3-30. Sub Harmonics and Interharmonics Test, Microwave Output

Output Frequency	Sub/Interharmonic Frequency			Limit
4.05 GHz	6.075 GHz	-	-	< -60 dBc
6.20 GHz	9.300 GHz	-	-	< -60 dBc
8.30 GHz	4.150 GHz	6.225 GHz	12.450 GHz	< -60 dBc
12.00 GHz	3.000 GHz	6.000 GHz	9.000 GHz	< -60 dBc
16.00 GHz	4.000 GHz	8.000 GHz	12.000 GHz	< -60 dBc
18.50 GHz	4.625 GHz	-		< -60 dBc
22.00 GHz	5.500 GHz	-	-	< -60 dBc
27.00 GHz	6.750 GHz	-	-	< -60 dBc

Note

The Microwave output signals at ≤4.024 GHz use the same frequency generation and synthesis circuits that are tested during the Leveling Head output spurious content tests. For signal outputs at >4.024 GHz frequency multiplication techniques are used, and no additional spurious generation mechanisms are present. Therefore, Microwave output spurious content testing is not required to adequately verify Product performance.

Modulation Test (96270A, Optional)

Equipment required for this test:

- Spectrum Analyzer/Measuring Receiver

To verify the amplitude and frequency modulated outputs of the UUT:

Note

Verification of phase modulation is not required as phase modulation is created as sinusoidal frequency modulation with peak deviation derived from the phase deviation and rate settings.

1. Connect the UUT Microwave output to the RF INPUT of the Spectrum Analyzer/Measuring Receiver.
2. On the Spectrum Analyzer/Measuring Receiver push PRESET and then select Measuring Receiver Mode.

Note

It may be necessary to readjust the measuring receiver's settings from those automatically configured in the modulation measurement mode. In particular, to ensure the demodulation bandwidth and measurement time settings are adequate to accommodate the modulated signal RF spectrum and to capture at least five cycles of the modulation waveform.

3. On the UUT press the SIGNAL key, and select the Microwave output. On the UUT press the MOD key, followed by the Modulation Select softkey and ensure amplitude modulation (AM) is selected. Set the UUT as follows:

Frequency	30 MHz
Level	+10 dBm
Mod Rate	20 kHz (Sine)
AM Depth	50 %
Output	OPER
Modulation	ON

4. Use the Spectrum Analyzer/Measuring Receiver autotune feature to tune to the input signal and measure the AM rate. Verify that the measured rate is within the tolerance listed in Table 3-31.

5. Set the UUT modulation rate to 100 kHz and repeat step 4.

Table 3-31. Microwave Output AM Rate Test

Frequency	Modulation Rate	Depth	Tolerance
30 MHz	20 kHz	50 %	19.999 0 kHz to 20.001 0 kHz
	100 kHz	50 %	99.99 0 kHz to 100.01 0 kHz

6. Set the UUT as follows:

Frequency	125 MHz
Level	+14 dBm
Mod Rate	1 kHz (Sine)
AM Depth	90%
Output	OPER
Modulation	ON

7. Use the Measuring Receiver autotune feature to tune to the input signal and measure the AM depth. Verify that the measured depth is within the tolerance listed in Table 3-32.

8. Repeat step 7 for the remaining AM depth test points listed in Table 3-32.

Table 3-32. Microwave Output AM Depth Test

Frequency	Modulation Rate	Depth	Tolerance
125 MHz	1 kHz	90 %	87.2 % to 92.8 %
	100 kHz	90 %	87.2 % to 92.8 %
1 GHz	1 kHz	90 %	87.2 % to 92.8 %
	20 kHz	90 %	87.2 % to 92.8 %

9. On the UUT, push the Modulation Select softkey and select frequency modulation (FM).

10. Set the UUT as follows:

Frequency	62.5 MHz
Level	+13 dBm
Mod Rate	1 kHz (Sine)
FM Deviation	300 kHz
Output	OPER
Modulation	OFF

11. Use the measuring receiver autotune feature to tune to the input signal and when tuning is complete set the UUT to Modulation ON.

12. Measure the FM rate. Verify that the measured rate is within the tolerance listed in Table 3-33.

Note

For accurate FM measurements the measuring receiver's setting demodulation bandwidth setting must be >3 x {rate + deviation}. In order to meet this requirement at higher rate and deviation frequencies the demodulation bandwidth setting must be increased from the default automatically configured in the modulation measurement mode.

13. Set the UUT FM rate to 300 kHz and the deviation to 1 MHz. Repeat steps 11 and 12.

Table 3-33. Microwave Output FM Rate Test

Frequency	Modulation Rate	Deviation	Tolerance
62.5 MHz	400 Hz	300 kHz	399.990 Hz to 400.010 Hz
	300kHz	1MHz	299.990 Hz to 300.010 kHz

14. Set the UUT as follows:

Frequency	125 MHz
Level	+13 dBm
Mod Rate	400 Hz (Sine)
FM Deviation	30 kHz
Output	OPER
Modulation	OFF

15. Use the Measuring Receiver autotune feature to tune to the input signal and when tuning is complete set the UUT to Modulation ON.
16. Measure the FM deviation. Verify that the measured deviation is within the tolerance listed in Table 3-34.
17. Repeat step 16 for the remaining FM deviation test points listed in Table 3-34. When setting a new carrier frequency select MODULATION OFF and repeat step 15 prior to repeating step 16.

Table 3-34. Microwave Output FM Deviation Test

Frequency	Modulation Rate	Deviation	Tolerance
125 MHz	400 Hz	100 kHz	99.70 kHz – 100.30 kHz
	100 kHz	100 kHz	99.70 kHz – 100.30 kHz
	400 Hz	300 kHz	309.0 kHz – 291.0 kHz
	100 kHz	300 kHz	309.0 kHz – 291.0 kHz
1 GHz	400 Hz	1 MHz	1.030 MHz – 0.970 MHz
	300 kHz	1 MHz	1.030 MHz – 0.970 MHz

Chapter 4
Calibration Adjustment

Introduction

⚠⚠Warning

To prevent possible electrical shock, fire, or personal injury:

- **Do not perform the verification tests or calibration procedures described in this manual unless you are qualified to do so. The information provided in this manual is for the use of qualified personnel only.**
- **Restrict the humidity of the operating environment to the level specified for any equipment used that conforms to IEC60950-1 used with the Product.**

Calibration Adjustments

This section of the chapter provides calibration adjustment procedures for correcting out-of-tolerance parameters so they meet published specifications. If the Instrument fails the performance test, it is an indication that the Instrument requires calibration adjustment and/or repair. Calibration adjustment does not require removal of the covers. See *Chapter 5, Maintenance*, for internal access and repair information.

Note

The Instrument top cover is removable for air filter cleaning access without the need to break calibration integrity seals. A calibration integrity seal is on the internal top shield and is revealed once the outer-top cover is removed (see Chapter 5, Maintenance *for details). Additional calibration integrity seals are located on the rear panel over the lower outer cover and over the calibration enable switch. Fluke Calibration recommends that users apply calibration integrity seals in the same three locations.*

Calibration adjustment of the Instrument can be performed locally from the instrument front panel or remotely using the IEEE-488 bus.

During calibration adjustment, measure the output amplitude to determine the absolute level error at the amplitude/frequency combination set. Make an entry via a front panel key sequence or via GPIB command sequence to adjust the output to correct any error from nominal, and store an appropriate correction factor in the internal non-volatile memory. This process is required at a variety of amplitude/frequency points throughout the amplitude and frequency range of the instrument. Users of the calibration process should familiarize themselves with the entire calibration adjustment process prior to attempting any calibration adjustment operations.

Environmental and warm up conditions required for performing the calibration adjustments are as follows:

- Ambient temperature of the test environment is 23 ±1 °C.
- Warm up time (continuous operation) for the Instrument, with all covers in place, is 1 hour (24 hours for adjusting the Reference Frequency).

Each calibration adjustment procedures lists the equipment required to perform the procedure and a figure detailing the equipment connections for the procedure. Perform the procedures in sequence, ensuring that all prior equipment connections have been removed before starting a new procedure. For the 96270A, the Microwave Output may be adjusted independently.

During the course of the adjustment process, depending on which adjustment procedure is in progress, the process may prompt for an AC Measurement Standard, followed by a Power Meter and sensor(s), a Power Sensor with a 6 dB attenuator fitted, and finally, a Spectrum Analyzer/Measuring Receiver. At various points within the process, values previously adjusted using one reference device are transferred to another for subsequent use.

To minimize the number of connection changes required during Instrument calibration adjustment, the steps are sequenced so that all steps requiring the AC Measurement Standard, for example, are performed together, as are the various steps requiring each of the other required reference devices.

Calibration adjustment of the Instrument is a systematic process. At each step, the display shows the adjustment target level and frequency values, and directs the user to the required measurement device. Following measurement of the expected target value, use the Instrument alphanumeric keypad to enter the measured value, followed by the softkeys, Accept Adjust, and Next Target.

Within any procedure the Instrument calibration adjustment must be completed in the order presented. Subsequent steps rely on measurement values entered during previous steps. For example, to repeat part of the procedure after an error or to pause and subsequently resume the procedure, skip to the first step of the affected adjustments and proceed from that point on. To do so, push the Find Point softkey, then use the blue arrow keys, rotary knob, or numeric keypad (followed by ENTER) to select the point number desired, then push Go to Point to complete the process. Use the information provided in the text box below the Adjustment Point as an aid to find the point.

The specifications listed in *Chapter 1* contain some conditions for which performance is not warranted or specified as “typical” (for example, at frequencies below 100kHz at levels -47 dBm, modulation, etc). The adjustment sequence also includes points for adjusting performance in these areas, which have no impact on the warranted performance of the Instrument. These additional points are adjusted at manufacture or following repair but need not be routinely re-adjusted during normal periodic recalibration operations. If necessary, omit the relevant steps in the calibration adjustment sequence if the

measurement capability is not available

A spreadsheet file containing a detailed list of calibration adjustment points is available on the CD supplied with the Instrument.

Rear Panel Calibration Enable Switch

The rear panel calibration switch must be set to the ENABLE (up) position prior to attempting any of the calibration adjustment procedures described below. On completion of all the required calibration adjustments, return the rear panel calibration switch to the DISABLE (down) position and fit a calibration integrity seal over the switch access.

Reference Frequency Adjustment

Equipment required for this test:

- Frequency Counter
- Frequency Standard

To adjust the frequency of the internal reference:

1. Warm up the UUT (continuous operation) for 24 hours, minimum.
2. Connect the 10 MHz output from the Frequency Standard to the EXT REF IN on the Frequency Counter (rear panel) using a BNC male – male cable assembly. Set the Frequency Counter for external time base reference.
3. Connect the REF FREQUENCY OUTPUT (on rear) from the UUT to the Channel A input on the Frequency Counter using a BNC male – male cable. Set the Frequency Counter input impedance to 50 Ω. See Figure 3-1 for equipment connections.
4. On the UUT enable the REF FREQUENCY OUTPUT at 10 MHz.
5. On the UUT, push SETUP , followed by the softkeys Support Functions>Calibration>Adjust Instrument.
6. Using the keypad, enter the password, and push ENTER.

Note

At shipment, the factory default password is "2, SPACE, 3, SPACE, 5, SPACE, 7".

7. Push the softkey Adjust Frequency.
8. Set the Frequency Counter controls for a reliable and repeatable frequency measurement.
9. Using the blue arrow keys and rotary knob, edit the UUT DAC Value until the Frequency Counter indicates 10.00000000 ±0.00000010 MHz.
10. Push Previous Menu. If desired to proceed with base adjustment, push Adjust Base. If not, push Exit.

Base Adjustment - Front Panel Head RF Output

Equipment required:

- AC Measurement Standard
- Precision 50 Ω feedthrough termination
- Power Meter
- Power Sensor, Diode, 50 Ω
- Spectrum Analyzer/Measuring Receiver
- 50 Ω Type-N female-to-BNC male adapter

Use the following procedure to adjust the UUT base (mainframe).

Note

If the Reference Frequency Adjustment was just completed, omit steps 1 through 2, below.

1. On the UUT, push SETUP , followed by the softkeys Support Functions>Calibration>Adjust Instrument.
2. Using the keypad, enter the password, and push ENTER.
3. Push the softkey Adjust Base.
4. Remove the Leveling Head from the UUT base unit (if connected). Connect the UUT front panel Head RF Output to INPUT 1 of the AC Measurement Standard via a precision 50 Ω feedthrough termination.

Note

For measurements made with the AC Measurement Standard during calibration adjustment, use a common mode choke as described in the Level Accuracy Test. Connect the choke input low to the AC Measurement Standard chassis ground. Keep the ground connection as short as possible and set the AC Measurement Standard to Internal Guard.

5. Set the UUT to OPER.
6. Using the blue arrow keys and rotary knob, edit the UUT Actual output until the AC Measurement Standard indicates the Target value stated. Push Accept Target.
7. Push Next Target.

Note

If the AC Measurement Standard used does not read the UUT output in dBm directly, calculate the desired value using the following formula:

$$dBm\,(50\,\Omega) = 10\log\left(\frac{V^2/50}{10^{-3}}\right)$$

Alternatively, the UUT units selection may be changed to V rms to display targets and adjust output values directly in rms voltage. Push UNITS *and select the required units.*

Note

Measurements made on the 5790A 2.2 mV range (at levels below −40 dBm) require correction for the 2.2 mV range linearity error.

8. Repeat steps 6 and 7 for all points requiring the use of the AC Measurement Standard (the UUT text box states Use Precision AC Voltmeter). Set the UUT to STBY.
9. Disconnect the AC Measurement Standard and 50 Ω feedthrough termination from the UUT base unit. Connect the UUT front panel Head RF Output directly to the input of the 50 Ω low-power (diode) sensor. Do not use a cable between the front panel Head RF Output connector and the Power Sensor input.

Note

Throughout the course of the calibration adjustment, the UUT internally accounts for values previously adjusted using one reference instrument to accomplish accurate transfers to other reference instruments.

10. Set the UUT to OPER.
11. Enter the measurement frequency corresponding to each Target into the Power Meter to enable cal factor (frequency) correction.

Note

The recommended Power Meter has Power Sensor calibration factors stored internally in the sensor. Setting the input frequency in the Power Meter automatically selects the appropriate cal factor for the measurement. However, the Power Sensor may also be accompanied by a table of calibration factors which must be applied externally.

Note

The diode-based Power Sensor may exhibit frequency dependent linearity errors, and additional corrections for these errors must also be applied.

Note

The Power Meter autorange boundary may coincide with a measurement point. To avoid unwanted Power Meter autoranging during the adjustment process, manually lock the Power Meter range when the UUT indicates the current adjustment point is a Transfer Point and maintain the Power Meter range lock for all frequencies at that amplitude. When the sequence reaches the next Transfer Point allow the Power Meter to autorange and then manually lock the Power Meter range again, continuing in this fashion for all points requiring use of the Power Meter.

12. Using the blue arrow keys and rotary knob, edit the UUT Actual output until the Power Meter indicates the Target value stated. Push Accept Target.
13. Push Next Target.
14. Repeat steps 11 through 13 for all points requiring the use of the Power Meter and sensor (the UUT text box states, Use Power Meter). Set the UUT to STBY.
15. Disconnect the Power Meter and sensor from the UUT base unit. Connect the UUT SMA output to the input of the Spectrum Analyzer/Measuring Receiver.
16. Set the UUT to OPER.
17. Set the Spectrum Analyzer reference level, span, resolution and/or video bandwidth as necessary to make a high-quality level measurement at each applied frequency and level.

Note

Depending on the actual configuration of the Spectrum Analyzer/Measuring Receiver used, the settings required to make the highest accuracy level measurements may vary. Consult the Spectrum Analyzer manufacturer's manual for further information.

Note

For each frequency it is important to maintain consistent analyzer/receiver settings as the target amplitude changes. For any given frequency the Analyzer setting can be to suit, but that setting must be maintained for all amplitudes at that frequency after the transfer point. In particular, analyzer attenuator, reference level and resolution bandwidth settings must not change. Typically, there are 3 or 4 amplitudes per frequency point during which the Analyzer settings must be static.

18. Using the blue arrow keys and rotary knob, edit the UUT Actual output until the Spectrum Analyzer indicates the Target value stated. Push Accept Target.
19. Push Next Target.
20. Repeat steps 17 through 19 for all necessary points requiring the use of the Spectrum Analyzer to make level adjustments. When complete the UUT adjustment point title will indicate AM Depth.
21. Disconnect the Spectrum Analyzer/Measuring Receiver from the UUT Base Unit front panel Head RF Output connector and fit the UUT 50 Ω Leveling Head. Connect the Leveling Head output to the Spectrum Analyzer/Measuring Receiver RF input.

22. Reconfigure the Spectrum Analyzer/Measuring Receiver to make AM depth measurements.
23. Using the blue arrow keys and rotary knob, edit the UUT Actual output until the Spectrum Analyzer indicates the Target value stated. Push Accept Target.
24. Push Next Target.
25. Repeat steps 23 through 24 until all Base adjustments are completed.
26. Push Back. To proceed with head adjustment, push Adjust Head. Otherwise, push Exit.
27. Remove all connections to the base unit.

Leveling Head Adjustment – 50 Ω

Equipment required:

- AC Measurement Standard
- Precision feedthrough termination, 50 Ω
- 50 Ω Type-N female-to-BNC male adapter
- Power Meter
- Power Sensor, Thermal, 50 Ω
- Power Sensor, Diode, 50 Ω
- Precision Adapter, Type-N female-to-female, 50 Ω
- Spectrum Analyzer/Measuring Receiver

Note

Base Adjustment must be performed before attempting Head adjustment. Once Base adjustment is complete, Head adjustment can take place in any order (50 Ω or 75 Ω first).

Note

If the Reference Frequency or Base Adjustment was just completed, omit steps 2 and 3, below.

1. Ensure a 50 Ω Leveling Head is connected to the UUT base.
2. On the UUT, push SETUP , followed by the softkeys Support Functions>Calibration>Adjust Instrument.
3. Using the keypad, enter the password, and push ENTER.
4. Push the softkey Adjust Head.
5. Connect the UUT Leveling Head to the input of the AC Measurement Standard via a precision 50 Ω feedthrough termination. (If a Type-N feedthrough termination is not available, use a 50 Ω BNC feedthrough termination and appropriate adapters.)

Note

For measurements made with the AC Measurement Standard during calibration adjustment, use a common mode choke as described in the Level Accuracy Test. Connect the choke input low to the AC Measurement Standard chassis ground. Keep the ground connection as short as possible and set the AC Measurement Standard to Internal Guard.

6. Set the UUT to OPER.

Note

The next steps make the low frequency flatness adjustment of the 50 Ω Leveling Head using the AC Measurement Standard.

7. Using the blue arrow keys and rotary knob, edit the UUT Actual output until the AC Measurement Standard indicates the Target value stated. Push Accept Target.

Note

If the AC Measurement Standard used does not read the UUT output in dBm directly, calculate the desired value using the following formula:

$$dBm\,(50\,\Omega) = 10\log\left(\frac{V^2/50}{10^{-3}}\right)$$

Alternatively, the UUT units selection can be changed to V rms to display targets and adjust output values directly in rms voltage. Push UNITS *and select the required units.*

Note

Measurements made on the 5790A 2.2 mV range (at levels below −40 dBm) require correction for the 2.2 mV range linearity error.

8. Push Next Target.
9. Repeat steps 7 and 8 for all points requiring the use of the AC Measurement Standard (the UUT text box will indicate Use Precision AC Voltmeter). Set the UUT to STBY.
10. Disconnect the AC Measurement Standard and feedthrough termination from the Leveling Head. Connect the UUT 50 Ω Leveling Head to the input of the 50 Ω Thermal sensor using a Type-N female-to-female adapter. See Figure 3-6 for equipment connections.

Note

The insertion loss of the 50 Ω Type-N female-to-female adapter must be taken into account at each adjustment frequency.

11. Set the Power Meter for 0.001 dB resolution.
12. Set the UUT to OPER.

Note

The next steps make the high-level flatness adjustment of the 50 Ω Leveling Head using a Power Meter and sensor.

13. Enter the measurement frequency corresponding to each Target into the Power Meter to enable cal factor (frequency) correction.

Note

The recommended Power Meter has Power Sensor calibration factors stored internally in the sensor. Setting the input frequency in the Power Meter automatically selects the appropriate cal factor for the measurement. However, the Power Sensor may also be accompanied by a table of calibration factors which must be applied externally.

Note

The Power Meter autorange boundary may coincide with a measurement point. To avoid unwanted Power Meter autoranging during the adjustment process, manually lock the Power Meter range when the UUT indicates the current adjustment point is a Transfer Point and maintain the Power Meter range lock for all frequencies at that amplitude. When the sequence reaches the next Transfer Point allow the Power Meter to autorange and then manually lock the Power Meter range again, continuing in this fashion for all points requiring use of the Power Meter.

14. Using the blue arrow keys and rotary knob, edit the UUT Actual output until the Power Meter indicates the Target value stated. Push Accept Target.
15. Push Next Target.
16. Repeat steps 13 through 15 for all points where the Target value is ≥-10 dBm requiring the use of the Power Meter and Thermal sensor. Set the UUT to STBY.

Note

If using a Power Sensor with different characteristics than the one specified is used, it may not be necessary to change types at this point. Consult the Power Sensor manufacturer's manual for input signal level specifications.

17. Replace the Thermal Power Sensor with the diode (low-power) sensor in the test setup.

Note

The diode-based Power Sensor may exhibit frequency dependent linearity errors, and additional corrections for these errors must also be applied.

Note

The next steps make the mid-level flatness adjustment of the 50 Ω Leveling Head using a Power Meter and sensor.

18. Set the UUT to OPER.
19. Repeat steps 13 through 15 for all points requiring the use of the Power Meter and diode sensor (the UUT text box will indicate Use Power Meter). Set the UUT to STBY.
20. Disconnect the Power Meter and low-Power Sensor from the Leveling Head. Connect the UUT 50 Ω Leveling Head to the input of the Spectrum Analyzer/Measuring Receiver.

Note

The next steps make the low-level flatness adjustment of the 50 Ω Leveling Head using a Spectrum Analyzer/Measuring Receiver.

21. Set the UUT to OPER.
22. Set the Spectrum Analyzer reference level, span, resolution and/or video bandwidth as necessary to make a high-quality level measurement at the applied level and frequency.

Note.

For each frequency it is important to maintain consistent analyzer/receiver settings as the target amplitude changes. For any given frequency the Analyzer setting can be to suit, but that setting must be maintained for all amplitudes at that frequency after the transfer point. In particular, analyzer attenuator, reference level and resolution bandwidth settings must not change. Typically there are 3 or 4 amplitudes per frequency point during which the Analyzer settings must be static.

23. Using the blue arrow keys and rotary knob, edit the UUT Actual output until the Spectrum Analyzer display indicates the Target value stated. Push *Accept Target*.
24. Push Next Target.
25. Repeat steps 22 through 24 for all points requiring the use of the Spectrum Analyzer until all Leveling Head adjustments are completed.
26. Push Back. The 50 Ω Leveling Head adjustment is now complete.
27. If additional Leveling Heads are to be adjusted, substitute the remaining Leveling Head(s) for the one currently attached and perform the appropriate (50 Ω or 75 Ω) Leveling Head adjustment process. If not, push Exit>Back>Exit to return the UUT to a normal operating state.

Leveling Head Adjustment – 75 Ω

Equipment required:

- AC Measurement Standard
- Precision feedthrough termination, 75 Ω
- 75 Ω Type-N female-to-50 Ω Type-N male adapter
- Power Meter
- Power Sensor, 75 Ω
- Spectrum Analyzer/Measuring Receiver
- Precision Adapter, Type-N female-to-female, 75 Ω
- 75 Ω to 50 Ω impedance-matching pad

Note

Base Adjustment must be performed before attempting Head adjustment. Once Base adjustment has been performed, Head adjustment can take place in any order (50 Ω or 75 Ω first).

Note

If the Reference Frequency or Base Adjustment was just completed, omit steps 2 and 3, below.

1. Ensure a 75 Ω Leveling Head is connected to the UUT base.
2. On the UUT, push SETUP , followed by the softkeys Support Functions>Calibration>Adjust Instrument.
3. Using the keypad, enter the password, and push ENTER.
4. Push the softkey Adjust Head.
5. Connect the UUT Leveling Head to the input of the AC Measurement Standard via a precision 75 Ω feedthrough termination. (If a Type-N feedthrough termination is not available, use a 75 Ω BNC feedthrough termination and appropriate adapters.)

Note

For measurements made with the AC Measurement Standard during calibration adjustment, use a common mode choke as described in the Level Accuracy Test. Connect the choke input low to the AC Measurement Standard chassis ground. Keep the ground connection as short as possible and set the AC Measurement Standard to Internal Guard.

6. Set the UUT to OPER.

Note

The next steps make the low frequency flatness adjustment of the 75 Ω Leveling Head using the AC Measurement Standard.

7. Using the blue arrow keys and rotary knob, edit the UUT Actual output until the AC Measurement Standard indicates the Target value stated. Push Accept Target.

Note

If the AC Measurement Standard used does not read the UUT output in dBm directly, calculate the value using this formula:

$$dBm\,(75\,\Omega) = 10\log\left(\frac{V^2/75}{10^{-3}}\right)$$

Alternatively, the UUT units selection may be changed to V rms to display targets and adjust output values directly in rms voltage. Push UNITS *and select the required units.*

Note

Measurements made on the 5790A 2.2 mV range (at levels below −42 dBm) require correction for the 2.2 mV range linearity error.

8. Push Next Target.
9. Repeat steps 7 and 8 for all points requiring the use of the AC Measurement Standard (the UUT text box will indicate Use Precision AC Voltmeter). Use Power Meter. Set the UUT to STBY.
10. Disconnect the AC Measurement Standard and feedthrough termination from the Leveling Head. Connect the UUT 75 Ω Leveling Head to the input of the

75 Ω Power Sensor using a Type-N female-to-female adapter. See Figure 3-11 for equipment connections.

Note

The insertion loss of the 75 Ω Type-N female-to-female adapter must be taken into account at each adjustment frequency.

11. Set the Power Meter for 0.001 dB resolution.

Note

The next steps make the high and mid-level flatness adjustment of the 75 Ω Leveling Head using a Power Meter and sensor.

12. Set the UUT to OPER.
13. Enter the measurement frequency corresponding to each Target into the Power Meter to enable cal factor (frequency) correction.

Note

The recommended Power Meter has Power Sensor calibration factors stored internally in the sensor. Setting the input frequency in the Power Meter automatically selects the appropriate cal factor for the measurement. However, the Power Sensor may also be accompanied by a table of calibration factors which must be applied externally.

Note

The Power Meter autorange boundary may coincide with a measurement point. To avoid unwanted Power Meter autoranging during the adjustment process, manually lock the Power Meter range when the UUT indicates the current adjustment point is a Transfer Point and maintain the Power Meter range lock for all frequencies at that amplitude. When the sequence reaches the next Transfer Point allow the Power Meter to autorange and then manually lock the Power Meter range again, continuing in this fashion for all points requiring use of the Power Meter.

14. Using the blue arrow keys and rotary knob, edit the UUT Actual output until the Power Meter indicates the Target value stated. Push Accept Target.
15. Push *Next Target*.
16. Repeat steps 13 through 15 for all points requiring the use of the Power Meter and sensor (the UUT text box will indicate Use Power Meter). Set the UUT to STBY.

Note

If using a Power Sensor with different characteristics than the one specified, it may be necessary to change sensors prior to this point. Consult the Power Sensor manufacturer's manual for input signal level specifications.

17. Disconnect the Power Meter and sensor from the UUT 75 Ω Leveling Head. Connect the 75 Ω Leveling Head to the input of the Spectrum Analyzer via a 75 Ω to 50 Ω impedance-matching pad at the Spectrum Analyzer RF input.

Note

The next steps make the low-level flatness adjustment of the 75 Ω Leveling Head using a Spectrum Analyzer/Measuring Receiver.

18. Set the UUT to OPER.
19. Set the Spectrum Analyzer reference level, span, resolution and/or video bandwidth as necessary to make a high-quality level measurement at the applied level and frequency.

Note.

For each frequency it is important to maintain consistent analyzer/receiver settings as the target amplitude changes. For any given frequency the Analyzer setting can be to suit, but that setting must be maintained for all amplitudes at that frequency after the transfer point. In particular, analyzer attenuator, reference level and resolution bandwidth settings must not change. Typically there are 3 or 4 amplitudes per frequency point during which the Analyzer settings must be static.

20. Using the blue arrow keys and rotary knob, edit the UUT Actual output until the Spectrum Analyzer display indicates the Target value stated. Push Accept Target.

Note

The recommended Spectrum Analyzer/Measuring Receiver is capable of automatically compensating for the insertion loss of the 75 Ω to 50 Ω impedance-matching pad. If this feature is not enabled or an alternative Spectrum Analyzer is used the insertion loss must be taken into account to obtain the expected level indication on the Spectrum Analyzer.

21. Push Next Target.
22. Repeat steps 19 through 21 for all points requiring the use of the Spectrum Analyzer until all Leveling Head adjustments are completed.
23. Push Back. The 75 Ω Leveling Head adjustment is now complete.
24. To adjust additional Leveling Heads, substitute the remaining Leveling Head(s) for the one currently attached and perform the appropriate (50 Ω or 75 Ω) Leveling Head adjustment process. If not, push Exit>Back>Exit to return the UUT to a normal operating state.

Microwave Output Adjustment – With Low-Level Output Option Fitted

Equipment required:

- AC Measurement Standard
- Precision feedthrough termination, 50 Ω
- 50 Ω Type-N female-to-BNC male adapter
- Power Meter
- Power Sensor, Thermal, DC - 27GHz, 50 Ω

Note

If another Adjustment procedure was just completed, omit steps 1 and 2, below.

1. On the UUT, push SETUP , followed by the softkeys Support Functions>Calibration>Adjust Instrument.
2. Using the keypad, enter the password, and push ENTER.
3. Push the softkey Adjust Microwave.
4. Connect the UUT Microwave Output to the input of the AC Measurement Standard via a precision 50 Ω feedthrough termination.

Note

For measurements made with the AC Measurement Standard during calibration adjustment, use a common mode choke as described in the Level Accuracy Test. Connect the choke input low to the AC Measurement Standard chassis ground. Keep the ground connection as short as possible and set the AC Measurement Standard to Internal Guard.

5. Set the UUT to OPER.

Note

The next steps make the low frequency flatness adjustment of the Microwave Output using the AC Measurement Standard.

6. Using the blue arrow keys and rotary knob, edit the UUT Actual output until the AC Measurement Standard indicates the Target value stated. Push Accept Target.

Note

If the AC Measurement Standard used does not read the UUT output in dBm directly, calculate the value using this formula:

$$dBm\left(50\,\Omega\right) = 10\log\left(\frac{V^2/50}{10^{-3}}\right)$$

Alternatively, the UUT units selection can be changed to V rms to display targets and adjust output values directly in rms voltage. Push UNITS *and select the required units.*

Note

Measurements made on the 5790A 2.2 mV range (at levels below −40 dBm) require correction for the 2.2 mV range linearity error.

7. Push Next Target.
8. Repeat steps 6 and 7 for all points requiring the use of the AC Measurement Standard (the UUT text box will indicate Use Precision AC Voltmeter). Set the UUT to STBY.
9. Disconnect the AC Measurement Standard and feedthrough termination from the Microwave Output. Connect the UUT Microwave output directly to the input of the 27GHz Thermal Power Sensor. Do not use a cable or adapter between the UUT connector and the Power Sensor input.
10. Set the Power Meter for 0.001 dB resolution.
11. Set the UUT to OPER.

Note

The next steps make the flatness adjustment of the Microwave Output using a Power Meter and sensor.

12. Enter the measurement frequency corresponding to each Target into the Power Meter to enable cal factor (frequency) correction.

Note

The recommended Power Meter has Power Sensor calibration factors stored internally in the sensor. Setting the input frequency in the Power Meter automatically selects the appropriate cal factor for the measurement. However, the Power Sensor may also be accompanied by a table of calibration factors which must be applied externally.

Note

The Power Meter autorange boundary may coincide with a measurement point. To avoid unwanted Power Meter autoranging during the adjustment process, manually lock the Power Meter range when the UUT indicates the current adjustment point is a Transfer Point and maintain the Power Meter range lock for all frequencies at that amplitude. When the sequence reaches the next Transfer Point allow the Power Meter to autorange and then manually lock the Power Meter range again, continuing in this fashion for all points requiring use of the Power Meter.

13. Using the blue arrow keys and rotary knob, edit the UUT Actual output until the Power Meter indicates the Target value stated. Push Accept Target.
14. Push Next Target.
15. Repeat steps 12 through 14 for all points requiring the use of the Power Meter until all Microwave Output adjustments are completed. Set the UUT to STBY.
16. Push Back. The Microwave Output adjustment is now complete.
17. If no further adjustment processes are to be performed, push Exit>Back>Exit to return the UUT to a normal operating state.

Microwave Output Adjustment – Low-Level Output Option Not Fitted

Equipment required:

- AC Measurement Standard
- Precision feedthrough termination, 50 Ω
- 6 dB Attenuator, DC – 27 G Hz, 50 Ω, 2.92 mm
- 50 Ω Type-N female-to-BNC male adapter
- Power Meter
- Power Sensor, Thermal, DC - 27GHz, 50 Ω

Note

If another Adjustment procedure was just completed, omit steps 1 and 2, below.

1. On the UUT, push SETUP , followed by the softkeys Support Functions>Calibration>Adjust Instrument.
2. Using the keypad, enter the password, and push ENTER.
3. Push the softkey Adjust Microwave.
4. Connect the UUT Microwave Output to the input of the AC Measurement Standard via a precision 50 Ω feedthrough termination.

Note

For measurements made with the AC Measurement Standard during calibration adjustment, use a common mode choke as described in the Level Accuracy Test. Connect the choke input low to the AC Measurement Standard chassis ground. Keep the ground connection as short as possible and set the AC Measurement Standard to Internal Guard.

5. Set the UUT to OPER.

Note

The next steps make the low frequency flatness adjustment of the Microwave Output using the AC Measurement Standard.

6. Using the blue arrow keys and rotary knob, edit the UUT Actual output until the AC Measurement Standard indicates the Target value stated. Push Accept Target.

Note

If the AC Measurement Standard used does not read the UUT output in dBm directly, calculate the value using this formula:

$$dBm\,(50\,\Omega) = 10\log\left(\frac{V^2/50}{10^{-3}}\right)$$

Alternatively, the UUT units selection may be changed to V rms to display targets and adjust output values directly in rms voltage. Push UNITS *and select the required units.*

Note

Measurements made on the 5790A 2.2 mV range (at levels below −40 dBm) require correction for the 2.2 mV range linearity error.

7. Push Next Target.
8. Repeat steps 6 and 7 for all points requiring the use of the AC Measurement Standard (the UUT text box will indicate Use Precision AC Voltmeter). Set the UUT to STBY.
9. Disconnect the AC Measurement Standard and feedthrough termination from the Microwave Output. Connect the UUT Microwave output directly to the input of the 27 GHz Thermal Power Sensor. Do not use a cable or adapter between the UUT connector and the Power Sensor input.
10. Set the Power Meter for 0.001 dB resolution.
11. Set the UUT to OPER.

Note

The next steps make the flatness adjustment of the Microwave Output using a Power Meter and sensor.

12. Enter the measurement frequency corresponding to each Target into the Power Meter to enable cal factor (frequency) correction.

Note

The recommended Power Meter has Power Sensor calibration factors stored internally in the sensor. Setting the input frequency in the Power Meter automatically selects the appropriate cal factor for the measurement. However, the Power Sensor may also be accompanied by a table of calibration factors which must be applied externally.

Note

The Power Meter autorange boundary may coincide with a measurement point. To avoid unwanted Power Meter autoranging during the adjustment process, manually lock the Power Meter range when the UUT indicates the current adjustment point is a Transfer Point and maintain the Power Meter range lock for all frequencies at that amplitude. When the sequence reaches the next Transfer Point allow the Power Meter to autorange and then manually lock the Power Meter range again, continuing in this fashion for all points requiring use of the Power Meter.

13. Using the blue arrow keys and rotary knob, edit the UUT Actual output until the Power Meter indicates the Target value stated. Push Accept Target.
14. Push Next Target.
15. Repeat steps 12 through 14 for all points requiring the use of the Power Meter without a 6 dB attenuator (the UUT text box states, Use Power Meter). Set the UUT to STBY.
16. Remove the Power Sensor from the UUT Microwave Output. Connect a 2.92 mm 6 dB attenuator to the UUT Microwave Output. Connect the Power Sensor to the other end of the attenuator. Do not use a cable or adapters.
17. Set the UUT to OPER.

Note

The next steps make the high-level linearity adjustment of the Microwave Output using a Power Meter, thermal sensor and attenuator. This process relies on the linearity of the Power Sensor. The recommended Power Sensor has only one level range. If using an alternative sensor, do not allow the Power Meter to change level range for the following points.

18. Repeat steps 12 through 14 for all points requiring the use of the Power Meter with a 6dB attenuator (the UUT text box states, Use Power Meter with 6dB Attenuator). Set the UUT to STBY.
19. Push Back. The Microwave Output adjustment is now complete.
20. If no further adjustment processes are to be performed, push Exit>Back>Exit to return the UUT to a normal operating state.

Microwave Output Flatness Characterization

The purpose of this process is to reduce the flatness ripple of the UUT Microwave Output due to internal signal path mismatches and other imperfections.

If the UUT has been dismantled this process must be performed. Otherwise this process is optional but can be performed at any time without affecting the performance of the unit at the adjustment points.

If the calibration stores have been cleared and not yet re-adjusted, or the UUT is faulty or grossly mis-adjusted, this process may fail or give incorrect results.

Equipment required:

- Compatible Power Sensor, DC - 27GHz or higher, 2.92mm, 50 Ω

Note

If another Adjustment procedure was just completed, omit steps 1 and 2, below.

1. On the UUT, push SETUP , followed by the softkey Support Functions>Calibration>Adjust Instrument.
2. Using the keypad, enter the password, and push ENTER.
3. Connect the control cable of a Rohde & Schwartz NRP-Z55 Power Sensor to the front-panel Sensor Port 1. (Other supported NRP-Z series sensors with a frequency capability of at least 27GHz may also be used.)
4. Attach the Power Sensor RF input directly to the UUT Microwave Output. Do not use a cable or adapters.
5. Push Microwave Flatness softkey.
6. The screen prompts for confirmation that the above connections have been made. Push the Yes softkey to proceed.
7. A progress bar shows on-screen and the UUT proceeds to characterize itself. This can take up to 30 minutes, depending on whether the Low-Level Microwave Output option is fitted.

If the measurement process produces unexpected results the process will abort and report an error. Otherwise, upon successful completion, the characterization data is stored internally.

Chapter 5
Maintenance

Operator Maintenance

Perform the subsequent general-maintenance procedures whenever necessary.

⚠⚠ Warning

To prevent possible electrical shock, fire, or personal injury:

- **Do not service the Product unless you qualified to do so.**
- **Have an approved technician repair the Product.**

This section contains the information necessary for basic maintenance of the Product. The procedures in this manual are intended for Service personnel

Clean the Product

For general cleaning, first disconnect all power input and signal cables. Wipe the Product with a soft cloth dampened with water or a non-abrasive mild cleaning solution that does not harm plastics.

⚠ Caution

To prevent damage to the Product, do not use aromatic hydrocarbons or chlorinated solvents for cleaning. They can damage the materials used in the Product.

Clean the Air Filter

Inspect and clean the rear-panel air filter at least once a year, or as necessary, to ensure adequate air circulation. If the rear panel filter air flow is obstructed, have the internal filter cleaned by a qualified technician using the procedure described below.

To get to the rear-panel filter:

1. Turn off the Product.
2. Remove the power cable.
3. The filter is held in place by a clip-on plastic cover. Remove the cover by squeezing and pulling the top two corners of the cover. It is not necessary to remove the Product covers.
4. Remove the filter gauze.

To clean and refit the filter gauze:

1. Clean the air filter with a dry brush or vacuum cleaner. If necessary, warm water and a mild detergent can be used.
2. Dry the air filter with a paper towel.
3. Replace the gauze filter into the plastic cover.
4. Re-fit the plastic cover.

Replace the Line-Power Fuses

⚠⚠ Warning

To prevent fire hazard or damage to the Product, verify that the correct fuses are installed. See Table 5-1 for the correct fuse ratings.

Fuse replacement is necessary if the Product blows a fuse. The line-power fuses are located on the power block on the rear panel. See Figure 5-1. The Product has dual fusing with fuses in both the line and neutral connections. When a blown fuse is replaced, replace both fuses to avoid a stressed fuse and subsequent power interruption. Before you try to access and replace the fuses, make sure that the replacement fuses are appropriate.

To check or replace the fuses:

1. Disconnect the Product from line power. Remove the mains power cord from the Product inlet.
2. To remove the combined power switch/fuse compartment, insert a screwdriver blade in the tab located on the left or right of the compartment. Gently pry until the compartment can be easily removed.
3. Pull the fuses from the compartment for replacement or inspection.
4. Install good fuses with the correct ratings. See Table 5-1 and Figure 5-1.
5. To reinstall the compartment, push it back into place until the tab locks.

Table 5-1. Line-Power Fuse

Line Power	Fuse Action	Fuse Rating	Fluke Part No.	Manufacturer and Type No.
100 V AC to 240 V AC	TH Time Delay, High Breaking Capacity	T5AH 250 V	2650730 (Quantity 2)	Littelfuse 215005.P Schurter 0001.2511

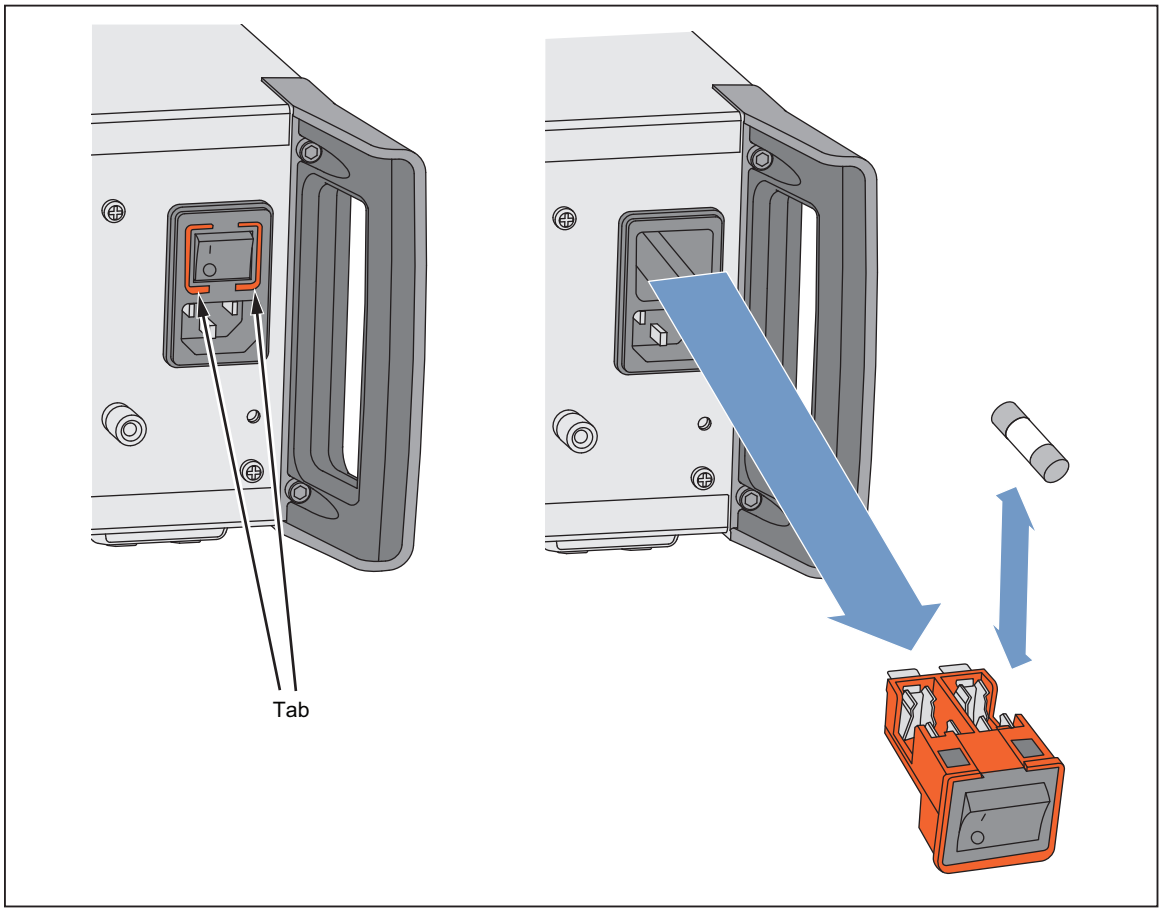

Figure 5-1. Access the Fuses

Troubleshooting

For basic troubleshooting, see the *Theory of Operation* and *Running the Self-Test* sections. If Self-test failures occur, either contact Fluke Calibration or refer to *Interpreting the Results* for guidance on how to proceed.

Disassembly and Reassembly

This section provides step-by-step instructions for disassembling and reassembling the Product. The instructions are limited to major replaceable assemblies and external hardware and do not include component level detail. Emphasis is placed on disassembly. However, when appropriate, an italicized entry at the end of each disassembly procedure provides critical hints for reassembly.

Note

These procedures apply to both 96040A and 96270A models.The 96270A model is used for illustration purposes, and any differences between the 96270A and 96040A models are noted in the relevant descriptions and procedures.

Use these procedures as necessary to access the following PCAs, modules, and components described in general maintenance, troubleshooting, and repair procedures.

- External Hardware Components, including the air filter
- RF Output PCA
- 2 x (96270A), 1 x (96040A)1P 2W Coaxial Relay
- 27 GHz Control (96270A)
- Digital PCA
- Synthesizer PCA
- Front Panel Assembly
- Display and Keypad PCAs
- Fans
- Rear Panel Assembly
- Interconnection PCA
- Power Transformer Assembly
- Power Supply PCA
- Mains SMPS Module
- Leveling Head – 50 Ω and 75 Ω

Before You Start

To ensure your safety and for the protection of the Product follow all of the considerations and recommendations that follow:

⚠⚠ Warning

To prevent possible electrical shock, fire, or personal injury:

- **Do not remove the covers from the Product unless you are qualified to do so.**
- **Disconnect all power cords, rear-panel cables, and front/rear test leads from the Product.**

⚠ Caution

To prevent possible damage to the product or to equipment under test:

- **Removing the internal top cover will void calibration of the Product.**
- **Removal of the external covers from the Leveling Head will void its calibration.**
- **Place the Product securely on an appropriate bench top or work surface before removing the covers. The Product is heavy.**
- **Use best practice anti-static techniques after removing its covers.**
- **Do not unnecessarily touch any part of the PCAs or straighten component positions on the PCAs.**

Removing External Hardware Components

Use the subsequent procedures to remove external hardware components from the Product. Removing all of the hardware components in sequence provides incremental access to the interior of the Product. See Figure 5-2.

Handles

The Product has four handles, two on the front panel and two on the rear panel. All four handles are the same. Each handle is secured to the chassis using five screws, two on the front of the handle and three on the side.

To remove each of the handles:

1. Locate the handle to be removed.
2. Remove the two screws on the front of the handle.
3. Remove the three screws from the side of the handle.

Top and Bottom Covers

The top and bottom covers are the same except for the feet on the bottom cover. To remove each of the covers:

1. Position the Product so the cover being removed is facing up.
2. Remove both handles on the rear panel. These are each secured by five screws.
3. Remove the two panhead screws that attach the cover to the rear panel.
4. Pull the rear edge of the cover back to release it from the front-panel bezel.
5. Lift the cover to free it from the channels on the side of the Product and remove it from the chassis.

Bottom Feet

The Product has four protective feet on the bottom cover. To remove one or more of the feet:

1. Position the Product so the bottom cover is facing up.
2. Push the release tab for the foot to remove the foot. Insert a small screwdriver into the open area to push the release tab.
3. Lift the foot from the bottom cover.

Shields

Sixteen counter sunk screws and seven panhead screws hold the internal shield in place. This shield must be removed for access to the PCAs within the main compartment. To remove the top shield:

1. Remove the top cover.
2. Remove the sixteen counter sunk screws from the top of the shield.
3. Remove the seven panhead screws from the side of the shield.
4. Remove the shield.

Remove the Air Filter

To remove the internal air filter, see Figure 5-2:

Note

It is not necessary to break the calibration integrity seal on the inner shield to remove the air filter.

1. Remove the top cover from the Product.
2. Locate the air filter and pull it up and out of the chassis. Note that this air filter can be cleaned and re-used.

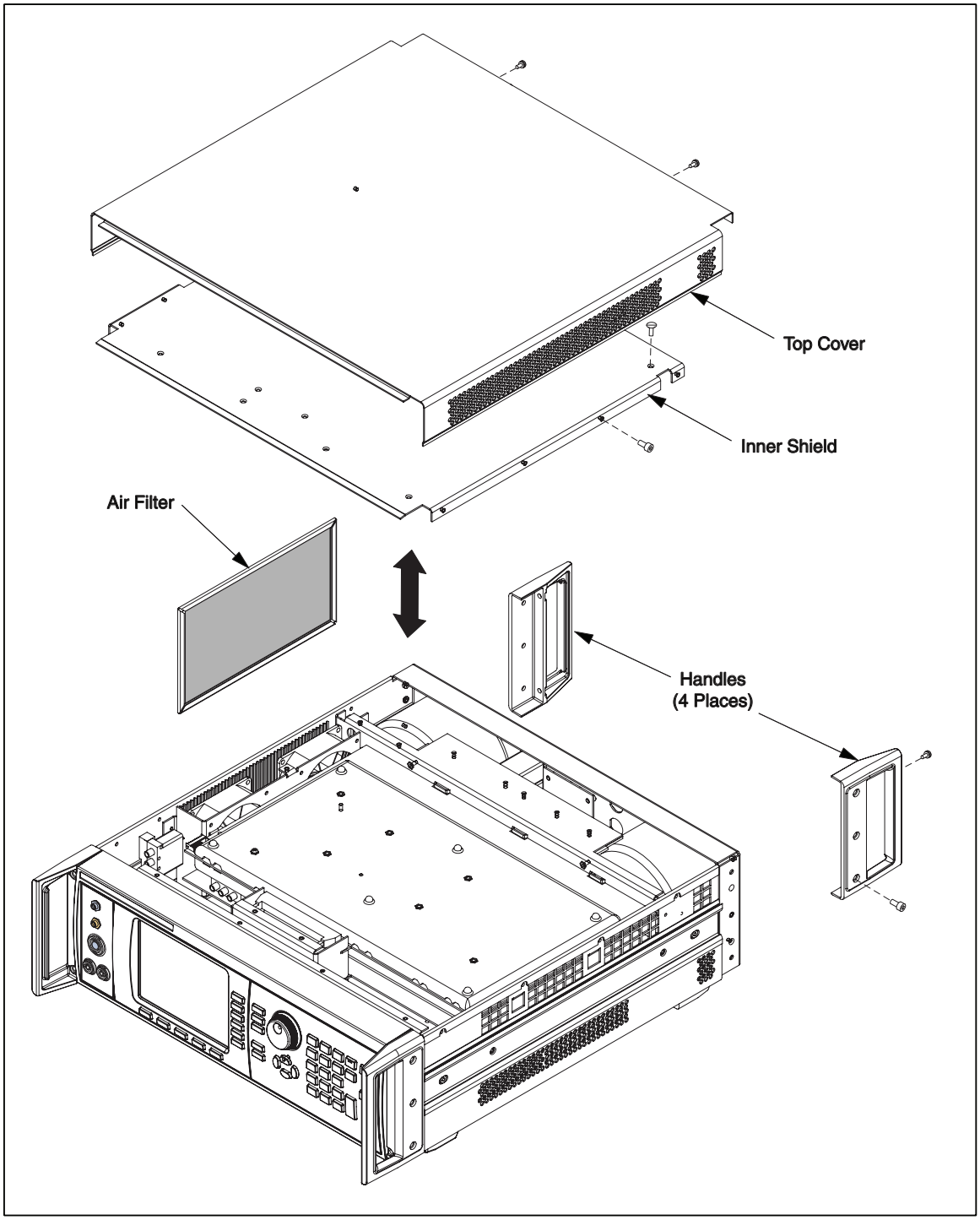

Figure 5-2. Removing External Hardware and Air Filter

Removing Major Assemblies

RF Output PCA

Three panhead screws hold the PCA in place. See Figure 5-3.

To remove the RF Output PCA:

1. Remove the top cover from the Product.
2. Remove the internal shield from the Product.
3. Slide the front PCA support bracket to the left and forward, lift it out.
4. Disconnect the 60-pin ribbon cable using the ejectors.
5. Disconnect the seven MCX connectors by gently pulling them straight out. Note that there is a diagram on the top screen for cable re-connection.
6. Disconnect the two SMA connectors using an 8 mm spanner. Note these connectors are torque tightened (1 Nm); do not attempt to tighten them before releasing these connectors.
7. Disconnect the pair of two-pin Molex connectors.
8. Disconnect the 20-pin control cable connector. Do not pull it by the leads; pull it by the body.
9. Remove the three panhead screws securing the PCA to the source.
10. Pull the PCA forward and lift it clear of Product.

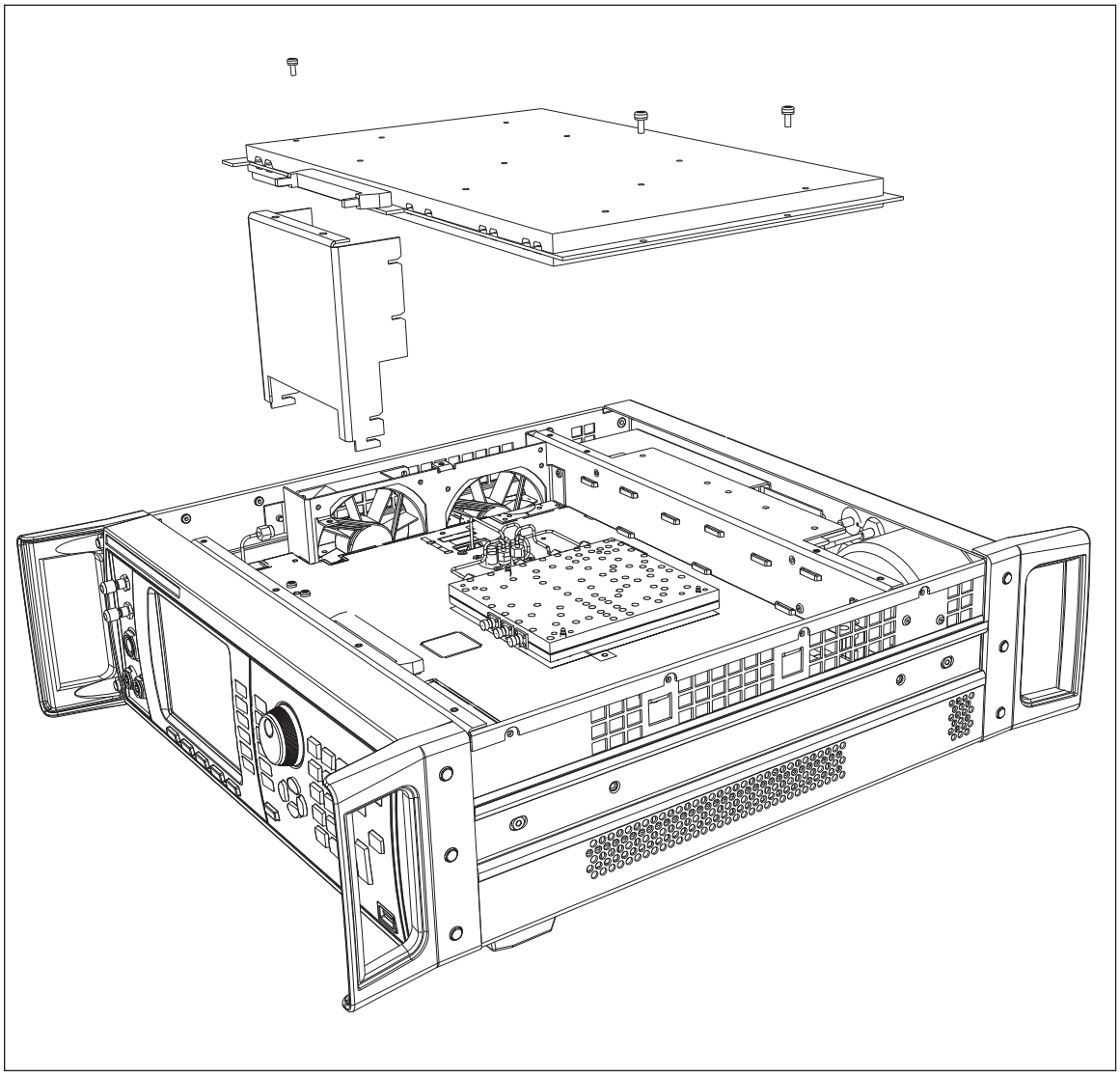

hpn374.eps

Figure 5-3. Removing the RF Output PCA

2 x 2W Coaxial Relays

Two panhead screws hold each Relay in place. To remove the 1P 2W Coaxial Relays:

1. Remove the top cover from the Product.
2. Remove the internal shield from the Product.
3. One relay is located on the left-hand side panel in front of the fans.
4. Starting from the front, disconnect the three SMA connectors using an 8 mm spanner. The third position has a pair of attenuators also attached. These can be removed with the relay. Note that these connectors are torque tightened (1 Nm). Do not attempt to tighten them before releasing these connectors.
5. Disconnect the 2 pin Molex connector from the RF module.
6. Remove the two panhead screws securing it to the side panel block, and lift out. The second relay, fitted on the front chassis bulkhead block, is present on the 96270A but not on the 96040A.
7. Starting from the right, disconnect the SMA connectors using an 8 mm spanner. The left position has an attenuator fitted and this can be removed with the relay. Note that these connectors are torque tightened (1 Nm); do not attempt to tighten them before releasing the connectors.
8. Disconnect the 2-pin Molex connector from the RF module.
9. Remove the two panhead screws securing it to the mounting block, and lift out.

Front Panel Assembly

The Front Panel Assembly includes the Bezel Assembly, the Display and Keypad PCA. See Figure 5-4.

To remove the Front Panel Assembly:

1. Remove the upper and lower screws on the side of the front panel handles.
2. Gently ease the Front Panel Assembly forward using the handles, as there are connectors still attached behind the panel.
3. When the front panel is forward sufficiently, disconnect the IDE cable (right-hand side) from the Digital PCA. Do not pull on the cable, but ease it out using the location lug on the connector.
4. Carefully remove the display cable from the Digital PCA as follows:
   a. Use finger nails to lift the cable-locking lever to the up position.
   b. Carefully remove the display cable from its housing by gently pulling.
5. Remove the Front Panel Assembly.

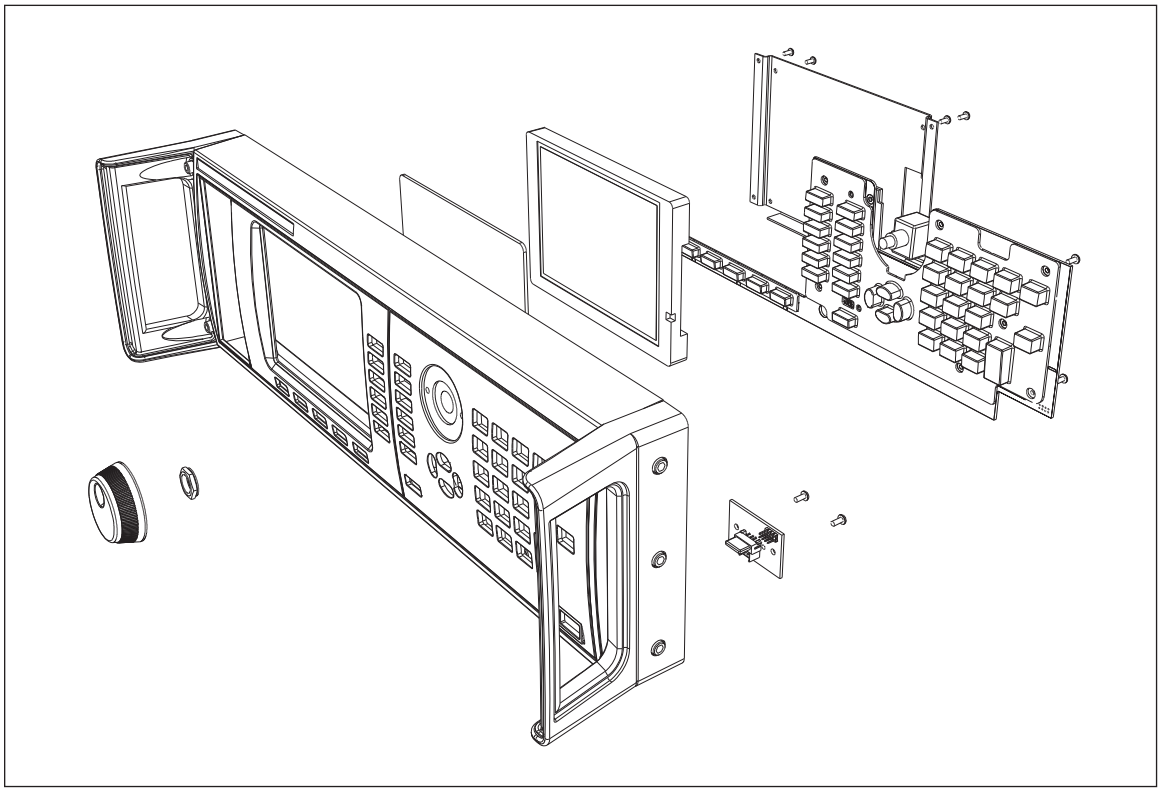

hpn375.eps

Figure 5-4. Removing the Front Panel Assembly

Display and Keypad PCA

To remove the Display and Keypad PCA:

1. Remove the Front Panel Assembly from the Product.
2. Remove the Spin Wheel. There are 2 holes in the bezel molding, visible from the inside face. These holes allow for using a thin screw driver shaft to push the Spin Wheel molding from the encoder shaft.
3. Remove the retaining nut and washer.
4. Lay the front panel face down on an antistatic surface and disconnect the cable from the backlight PCA. The PCA is extremely thin, use care during the removal process.
5. Remove the four outer self-tapping screws from the metal display support bracket and lift it out, taking care not to scratch the display or window.
6. Remove the two USB pca fixing screws, unplug and lift out.
7. Remove the seven self-tapping screws securing the Keypad PCA to the front panel. Lift out the Keypad PCA and spin wheel device. Note the bottom edge of the Keypad PCA locates to the front panel. Use a slight forward pressure to remove the PCA.
8. Lift out the rubber keypads.

Note

The display window is secured in place by adhesive tape. Do not remove the display unless it or the display window is being replaced.

Note

The inside of the front panel has a nickel conductive coat applied to it. Be careful to avoid damaging the coating.

Digital PCA

The PCA is located behind the front panel and attached to the Product. It can be removed without removing the top and bottom covers from the Product. See Figure 5-5.

To remove the Digital PCA:

1. Remove the Front Panel Assembly from the Source.
2. Remove the six panhead screws securing the Digital PCA to the Product.
3. Remove the 60-pin IDE ribbon cable at the top of the PCA by prying the location lug out of its housing.
4. Remove the 60-pin IDE ribbon cable located on the base of the PCA by prying the location lug out of the housing.
5. Remove the small 18-way connector.
6. Remove the Digital PCA from the Product.

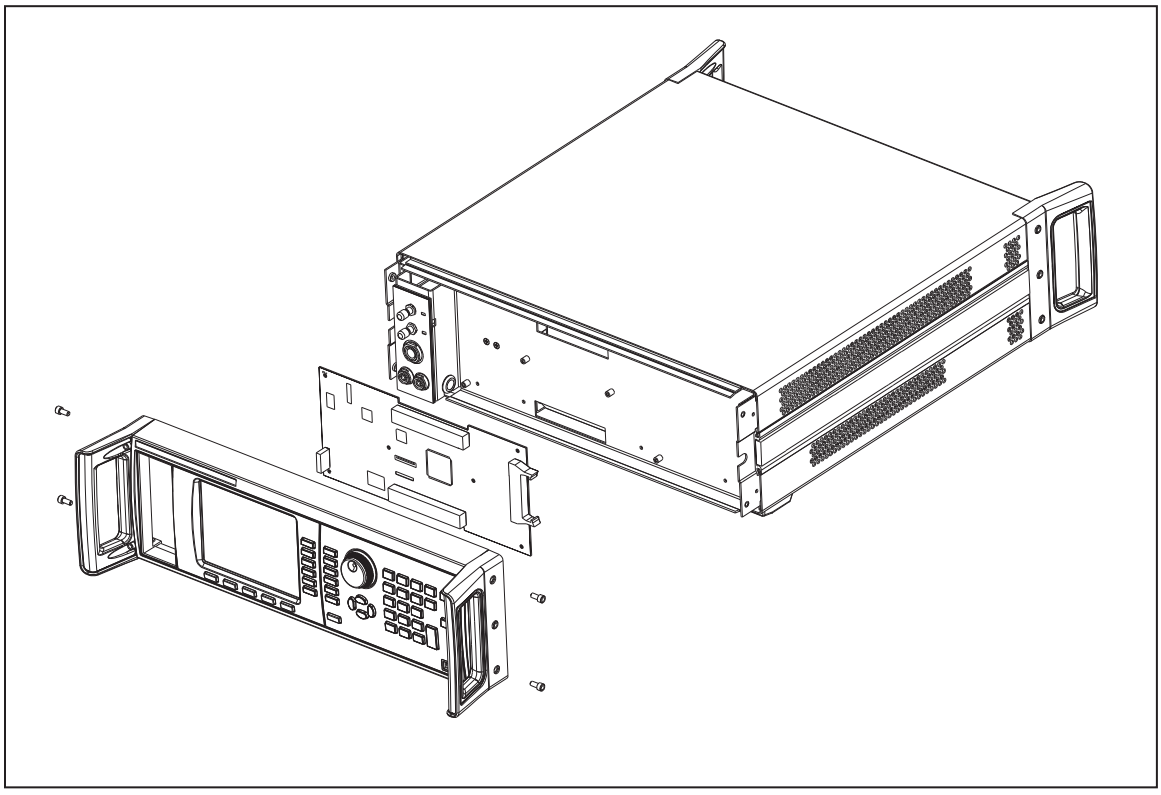

hpn376.eps

Figure 5-5. Removing the Digital PCA

27 GHz Control PCA (96270A)

Six panhead screws hold the PCA in place. To remove the 27 GHz Control PCA, see Figure 5-6:

1. Remove the top cover from the Product.
2. Remove the Internal Shield from the Product.
3. Remove the Output PCA.
4. Disconnect the 60-pin IDE ribbon cable.
5. Disconnect the 2 MCX connectors from the front edge of PCA by gently pulling them straight out.
6. Disconnect the SMB connector located at the rear right of the PCA by pulling firmly upwards by the body of the connector.
7. Disconnect the SMA cable from position 1 of the coaxial switch using an 8 mm spanner, see note.
8. Disconnect the SMA cable from the front edge of the 27 GHz metal module using an 8 mm spanner, see note.
9. Disconnect the Microwave output semi-rigid cable connector from the bracket (or Attenuator if option is fitted) using an 8 mm spanner, see note.

Note

These connectors are torque tightened (1 Nm). Do not attempt to tighten before releasing these connectors.

10. Remove the 6 panhead-fixing screws, slide the PCA slightly forward and lift from the left edge and maneuver the PCA out of the chassis.

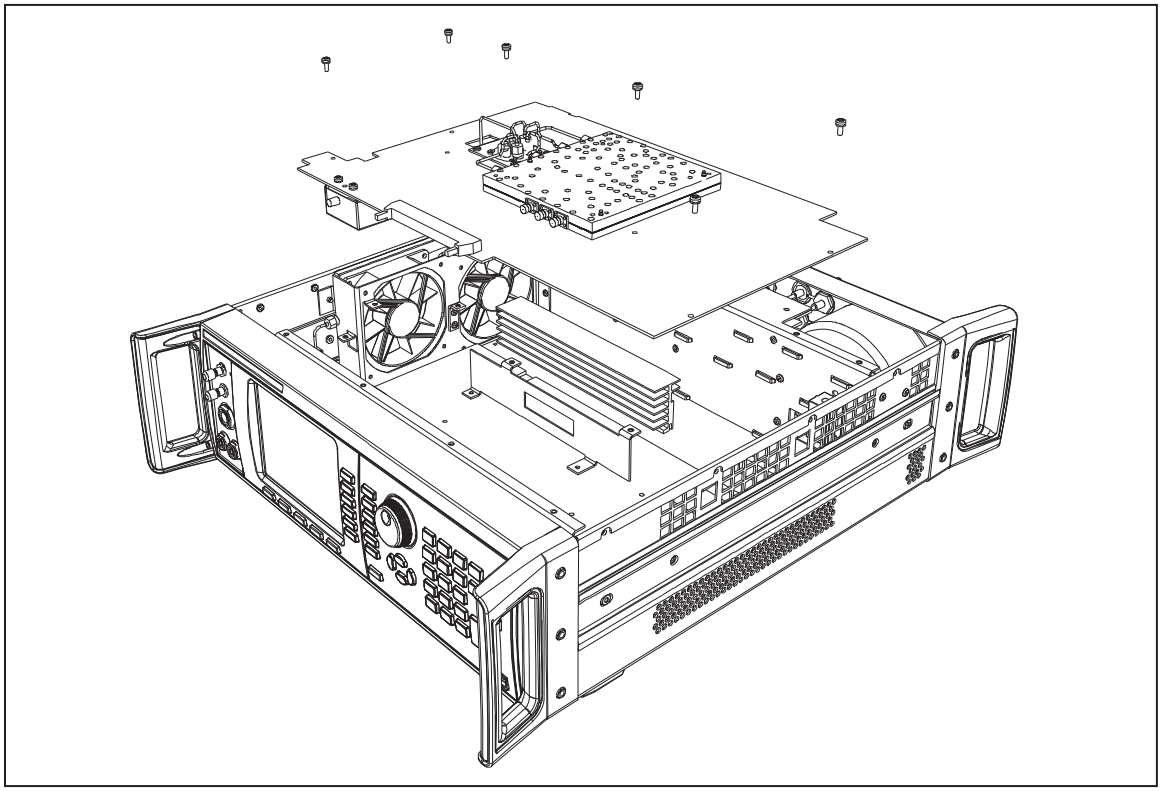

hpn377.eps

Figure 5-6. Removing the 27 GHz Control PCA (96270A)

Synthesizer PCA

The Synthesizer PCA is located beneath the 27 GHz Control PCA. Four panhead screws secure this assembly to the Product. See Figure 5-7.

To remove the Synthesizer PCA:

1. Remove the top cover from the Product.
2. Remove the internal shield from the Product.
3. Remove the RF Output PCA from the Product.
4. Remove the 27 GHz Control PCA (96270A).
5. Disconnect the four SMB connectors by pulling firmly upwards by the body of the connector. Each connector is color coded. Note the location of each cable for re-assembly.
6. Disconnect the 10-pin Molex connector at the rear of the PCA.
7. Disconnect the seven MCX connectors at the front of the PCA by gently pulling and setting to one side. There is a diagram on the top screen of the Output PCA for cable re-connection. 96270A - Disconnect SMA connector from front edge of PCA using 8 mm spanner. Note that these connectors are torque tightened (1 Nm). Do not attempt to tighten before releasing this connector.
8. Disconnect the 60–pin IDE cable using the ejectors.
9. Remove the four panhead screws from the Synthesizer PCA. Pull the PCA forward and lift it from the chassis.

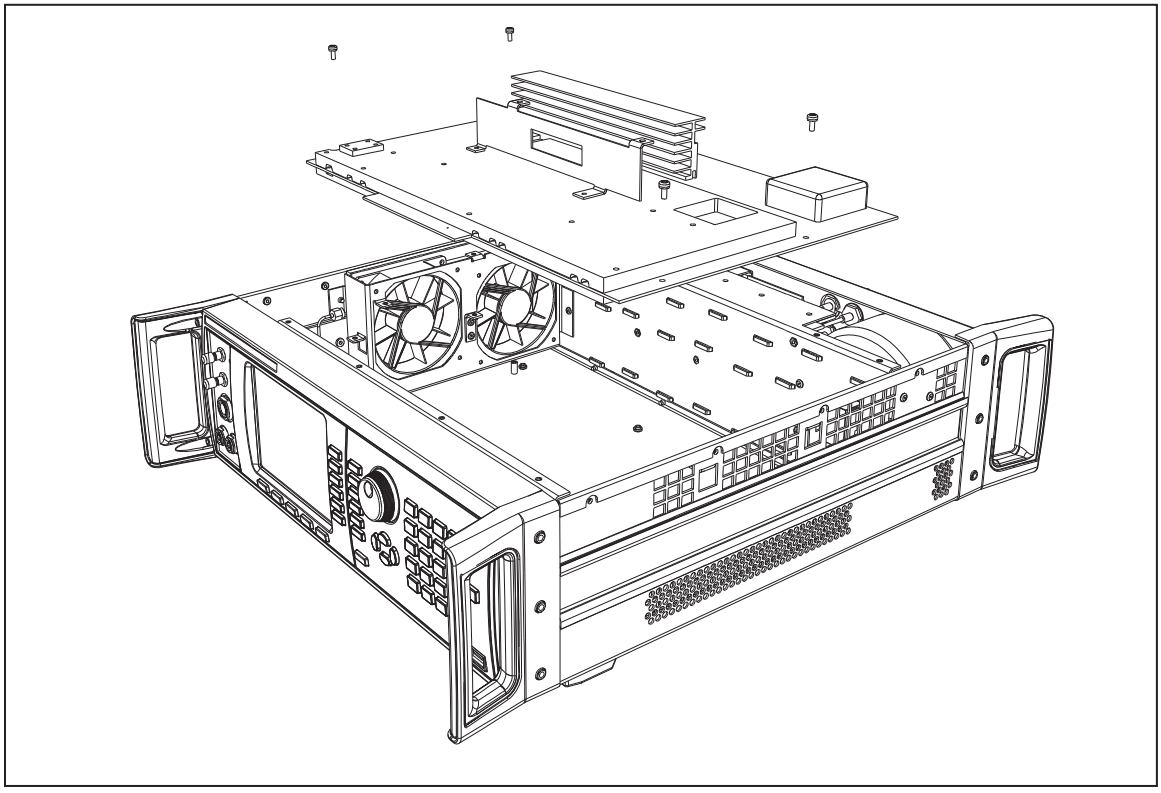

hpn378.eps

Figure 5-7. Removing the Synthesizer PCA

Fans

Two cooling fans are secured to the side of the chassis each with four pan head screws. See Figure 5-8.

To remove one or both fans:

1. Remove the top cover from the Product.
2. Remove the air filter.
3. Remove the internal shield.
4. Remove the RF Output PCA.
5. 96270A - Remove the 27 GHz Control PCA.
6. Remove the Synthesizer PCA.
7. Disconnect the two, two-pin Molex connectors from the Power Supply PCA by turning the Product on its side to gain access. On completion return the Product onto its base position.
8. Remove the four panhead screws from each fan.
9. Cut the cable tie that holds the wires to chassis.
10. Lift the fan up and away from the chassis (similar to the air filter) making sure that the Molex connector on the cable passes through the grommet without jamming.

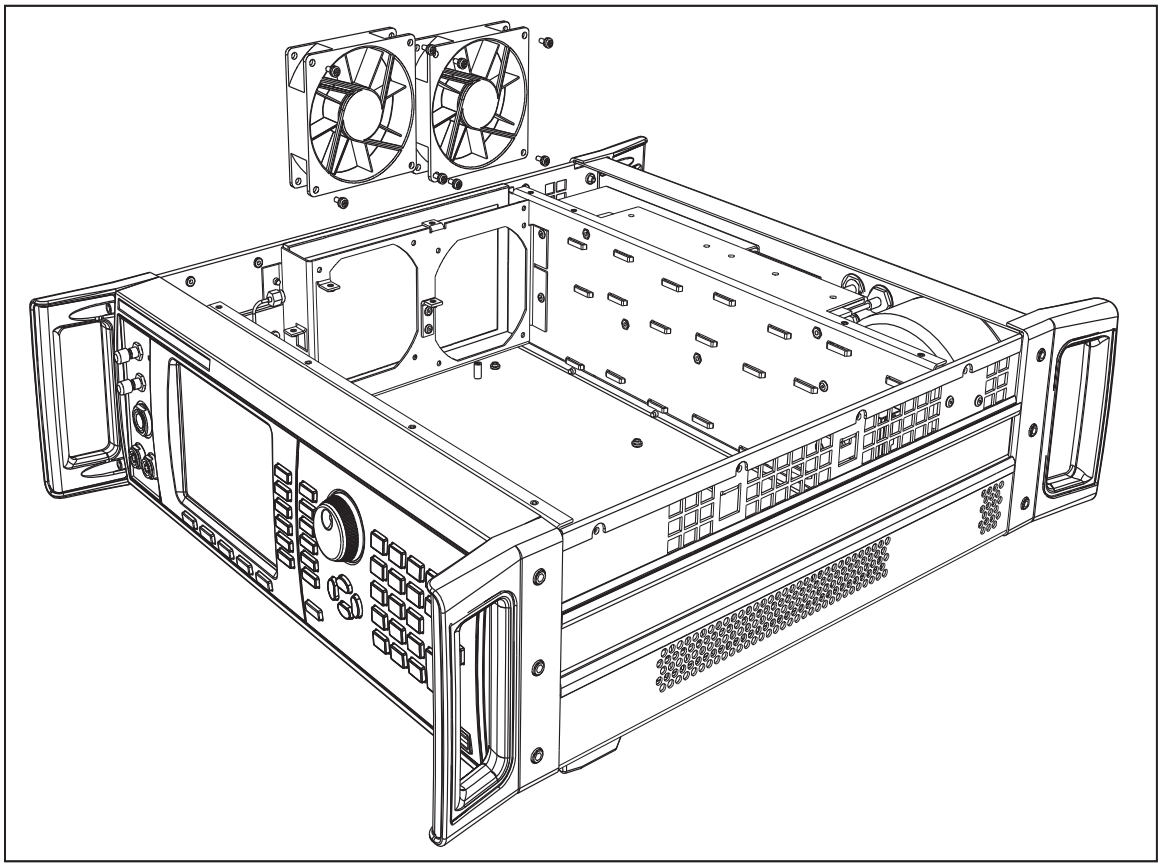

hpn379.eps

Figure 5-8. Removing the Fans

Rear Panel Assemblies

The Rear Panel provides the hardware for mounting the Low Voltage Transformer, the Interconnection PCA, and the Switch Mode Power Supply Module. See Figure 5-9.

To remove the Rear Panel Assembly:

1. Remove rear handles.
2. Remove the top and bottom covers from the Product.
3. Remove the internal shield.
4. Remove the RF Output PCA.
5. 96270A - Remove the 27 GHz Control PCA.
6. Disconnect the four SMB connectors on the Synthesizer PCA.
7. Disconnect the 10-pin Molex connector from the Synthesizer PCA.
8. Turn the Product on its side to gain access to the rear panel Interconnections PCA.
9. Disconnect the Interconnection PCA 34-pin IDE connector using the ejectors.
10. Return the Product to its initial position and remove the two countersunk screws from each side of the rear panel.
11. Ease the rear panel away from the source to access and disconnect the two Molex connectors from the SMPS Module and the Molex connector from the low voltage transformer.
12. Pull the Rear Panel Assembly free of the chassis. Make sure the 10-pin Molex connector and the four SMB connectors pass through the chassis cut out without damage.

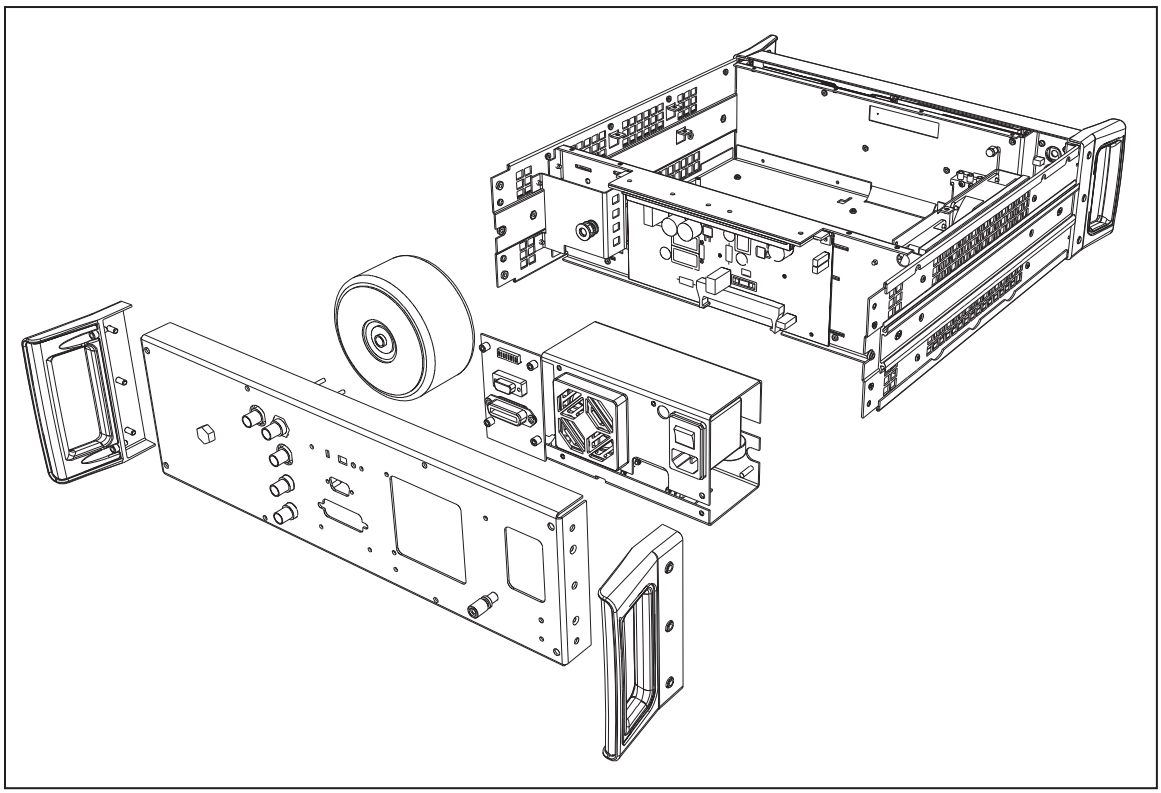

hpn380.eps

Figure 5-9. Removing the Rear Panel

Interconnection PCA

To remove the Interconnection PCA. See Figure 5-9.

1. Remove rear handles.
2. Remove the top and bottom covers from the Product.
3. Remove the internal shield.
4. Remove the RF Output PCA.
5. 96270A - Remove the 27 GHz Control PCA.
6. Remove the Rear Panel Assembly.
7. On the rear panel remove the two serial port connector retaining screw pillars, the two retaining IEEE 488 connector screw pillars, and the four panhead screws securing the Interconnection PCA to the rear panel.
8. Lift the Interconnection PCA from the Rear Panel Assembly.

Low Voltage Transformer

To remove the low voltage transformer. See Figure 5-9.

1. Remove rear handles.
2. Remove the top and bottom covers.
3. Remove the internal shield.
4. Remove the RF Output PCA.
5. 96270A - Remove the 27 GHz Control PCA.
6. Remove the Rear Panel.
7. Remove the retaining bolt from the Low Voltage Transformer (13 mm spanner) and lift out the transformer.

Power Supply PCA

To remove the Power Supply PCA. See Figure 5-10.

1. Remove rear handles.
2. Remove the top and bottom covers from the Product.
3. Remove the internal shield.
4. Remove the RF Output PCA.
5. 96270A - Remove the 27 GHz Control PCA.
6. Remove the Rear Panel Assembly.
7. Disconnect the two, 2-pin Molex connectors for the fans.
8. Disconnect the 60-pin ribbon cable using the connector ejectors.
9. Remove the six panhead screws that secure the PCA to the Product.
10. Lift the Power Supply PCA from the chassis.

Switch Mode Power Supply Module

To remove the SMPS Module, see Figure 5-9:

1. Remove rear handles.
2. Remove top and bottom covers.
3. Remove the internal shield.
4. Remove the RF Output PCA.
5. 96270A - Remove the 27 GHz Control PCA.
6. Remove the Rear Panel Assembly.
7. On the rear panel remove the 5 panhead screws.
8. Remove the Earth stud fixing nut and washer using the 8 mm nut spinner.
9. Lift away from rear panel.

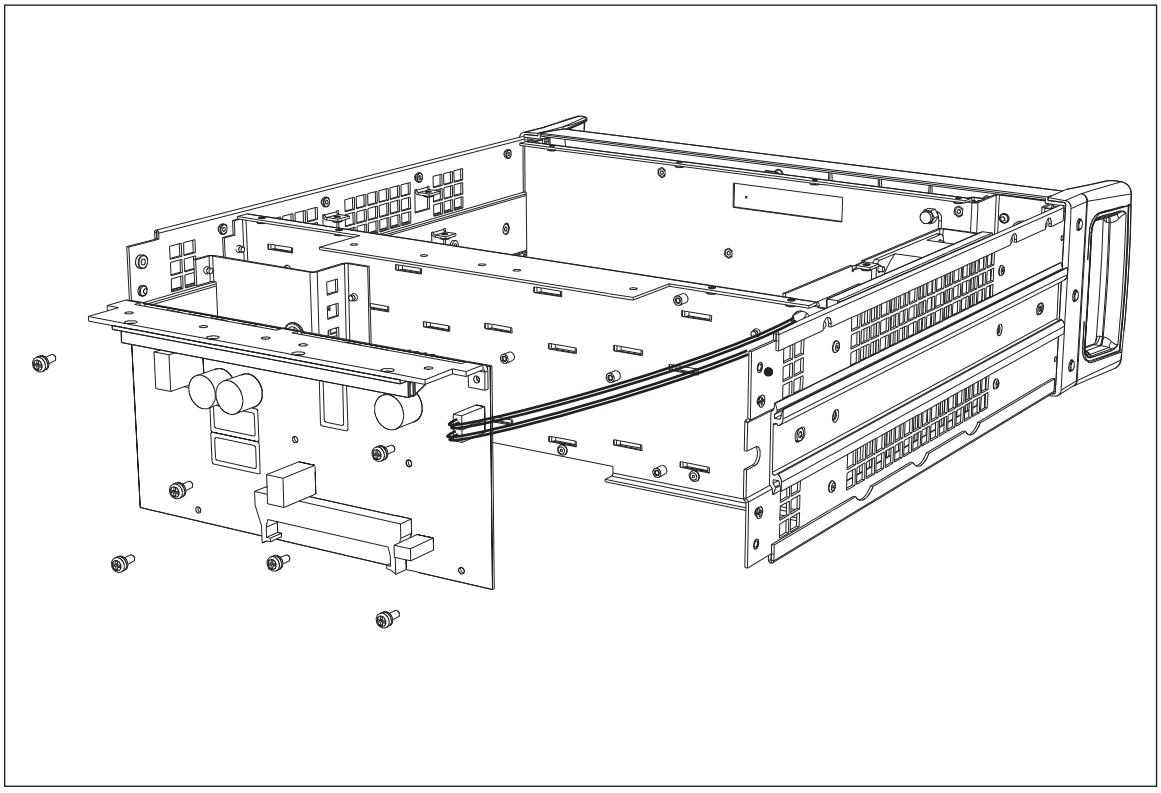

hpn381.eps

Figure 5-10. Removing Power Supply PCA

Leveling Head 50 Ω and 75 Ω –Disassembly and Reassembly

⚠ Caution

To prevent possible damage to the product or to equipment under test, disconnect the Leveling Head from the Product before performing the Leveling Head disassembly/reassembly procedures.

Leveling Head Disassembly Procedure

To disassemble a Leveling Head, see Figure 5-11:

1. Carefully peel and remove the overlay from the top portion of the case (top case).
2. Remove the eight top case fixing screws.
3. Lift the top case from the Leveling Head.
4. To remove the Head Control PCA, disconnect 20-pin connector. The PCA can now be unplugged from the source.
5. To remove the 4 GHz Head PCA:
   a. Remove three screws and cable clamp.
   b. Disconnect SMA connector using the 8 mm spanner. Note that this connector is torque tightened (1 Nm). Do not attempt to tighten before releasing the connector.
   c. Remove cable from Source.
   d. Remove four countersink screws from N type connector.
   e. Remove thirteen screws from the PCB metal screen.
   f. Remove metal screen.
   g. Carefully remove 4 GHz Head PCA with attached N type connector.

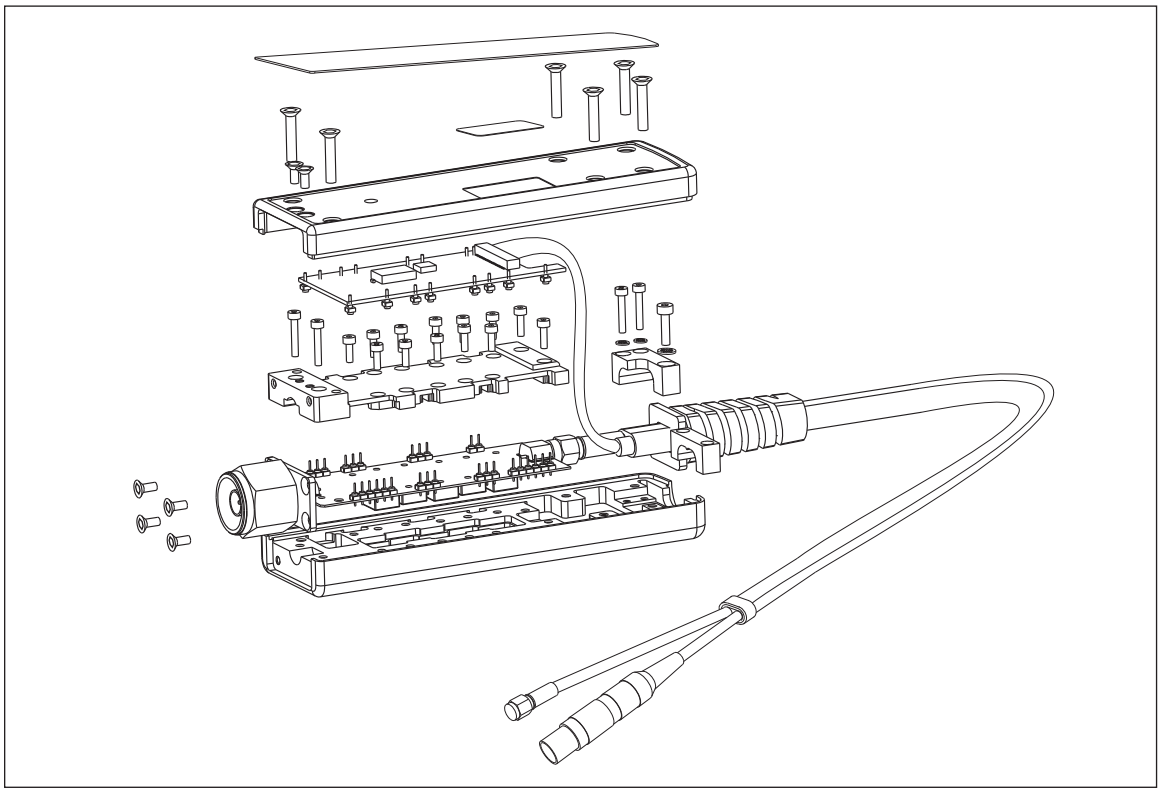

hpn382.eps

Figure 5-11. Exploded View of the Leveling Head

Leveling Head Reassembly Procedure

To reassemble the Leveling head, see Figure 5-11:

1. Position the 4 GHz Head PCA in the bottom case.
2. Push the N-type connector plate gently back to mate with the case.
3. Refit the metal screen and 13 screws. Torque them to 0.25 Nm (2.22 in-lb).
4. Secure the N-type connector to the bottom case and screen with the four countersunk screws and torque them to 0.25 Nm (2.22 in-lb).
5. Fit the cable to bottom screen and connect the SMA connector to 4 GHz Head PCA. Torque to 1Nm (8.85 in-lb).
6. Position and align the cable clamp with the screw holes in the bottom-half of the case; make sure there are no wires being trapped.
7. Fit and tighten the three cable-clamp screws as follows:
   a. Torque the two M2 screws to 0.25 Nm (2.22 in-lb).
   b. Torque the one M2.5 screw to 0.4 Nm (3.54 in-lb).
8. Plug the Head Control PCA into position and re-connect the 20-pin connector.
9. Fit all eight cover-fixing screws. Torque to 0.4 Nm (3.54 in-lb).

Reassembling the Product

To reassemble the Product, logically reverse the disassembly procedures. In the process, make sure to re-establish all electrical connections. Also make sure all parts are correctly aligned and positioned, observe torque settings where applicable, and do not force-fit any of the parts into position.

Safety Test

Perform electrical safety tests as required by local legislation. Fluke Calibration recommends, at a minimum, a check of the continuity from the earth terminal in the Product inlet to all accessible metal parts followed by an electric strength test between mains terminals (L, N) and earth ground.

Running Self-Test

The subsequent instructions for the self-test are given in terms of button pushes from the front panel. The same instructions can also be initiated with the IEEE 488 instructions in a system environment.

Note

The Base level self-test can be run with or without a Leveling Head attached. However, when a Leveling Head is attached, ensure that the Leveling Head output is disconnected during self-test and that there are no earth connections to the floating RF common. This includes the Leveling Head body and the top two rear BNC connectors.

To run a self-test:

1. Prepare the Instrument for operation.
2. Push SETUP .
3. Push the Support Functions softkey.
4. Push the Self-Test softkey at the bottom of the display. The Self-Test screen is shown. See Figure 5-12.

The screen shows that no tests have been executed and provides for the selection of the self-test sequence to run, All, Base, or Head.

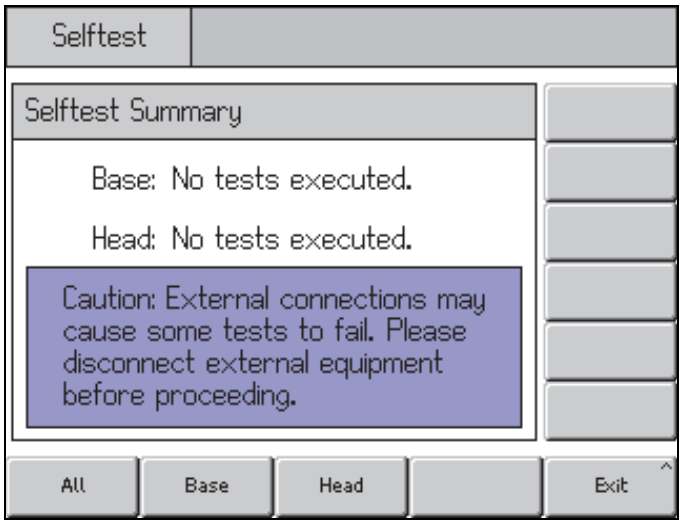

hpn85.bmp

Figure 5-12. Select a Self-Test Sequence

4. Push the softkey for the desired sequence, All, Base, or Head.

   Select one of the three sequence options to initiate the test sequence and show a progress-bar screen. On completion of the sequence, the progress bar will clear showing the previous screen with the total number of both Base and Head failures as shown below. See Figure 5-13.

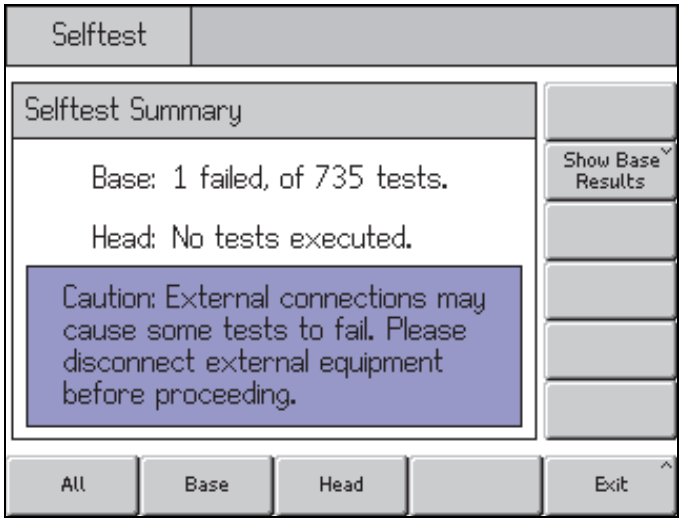

hpn86.bmp

Figure 5-13. Summary of Self-Test Results

Review the Results

If one or more failures occur as a result of running the self-test, they are itemized and shown as Base or Head failures. Either of the two categories, Base or Head, can be expanded to show the detailed results of each failed test. Pushing either the Show Base Results or Show Head Results softkeys expands the test results as shown below. The Prev. Failure and Next Failure softkeys step through the failures. Push the Previous Menu softkey to return the display to the Self-Test Summary screen. See Figure 5-14.

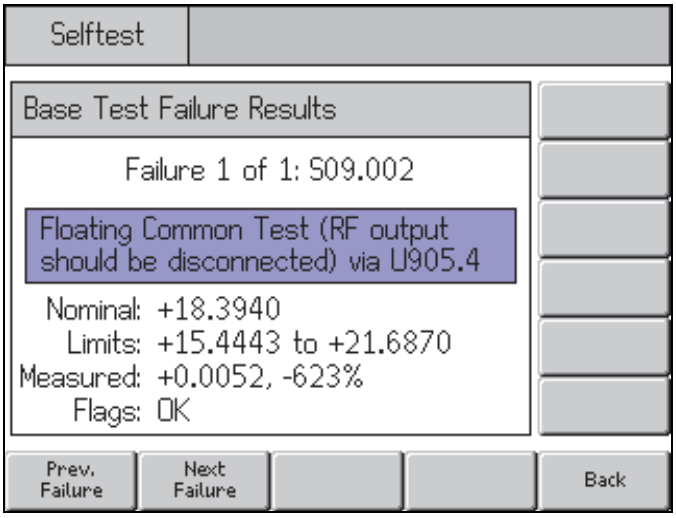

hpn87.bmp

Figure 5-14. Expanded Self-Test Failure Results

If Self-Test failures are reported, note each failure and the results. Either contact Fluke Calibration or refer to *Interpreting the Results* for guidance on how to proceed.

Table 5-2. Descriptions of the Rows in a Test Failure Display

Row	Identifier	Description
1	Failure Number	Incremental test number (starting at 1) assigned to each failed measurement
	Test Point Name	An encoded string containing the following: Major Assembly Identification [1] S = Synthesizer PCA A = RF Output PCA H = Leveling Head M = Microwave PCA Schematic Sheet Identification (2 digits) Schematic Test Sequence Number (3 digits)
2	Test Point Description	Brief description of the test point such as “+15V Supply via U909.3”
3	Nominal	Expected measurement value
4	Lower and Upper Limit	Prescribed lower and upper limit of the measured value
5	Measured Value and Calculated Error	Actual measured value Error calculated from the measured value, the nominal value, and either the upper or lower limit to indicate the relative extent of the failure
6	Flags	Status of the detectors relevant to the test point. Indicate OK unless there is a failure. For example, PLL1 UNLOCKED indicating that phase locked loop number 1 is unlocked

[1] S04.003 would be the third test on sheet four of the Synthesizer PCA.
At the schematic level, the sheet number generally refers to the source of the signal being measured or feature being tested.
For Synthesizer PCA test points, U909.3 refers to input number 3 of the Synthesizer PCA self-test multiplexer (designator U909), which is routing the signal to the ADC. For RF Output PCA tests, the multiplexer designator refers to the RF Output PCA schematic.

Interpreting the Results

The failure information on the display can assist with isolating a problem to a given PCA. For example, in a case where a single failure occurs, the code letter in the test point name (S, A, H, or M) will indicate which assembly is most likely to be the source of the problem. (See Test Point Name encoding in Table 5-2.) However, in cases where multiple assemblies show failures, isolating the problem is less straightforward. In these cases it can be helpful to refer to *Chapter 2, Theory of Operation* to help isolate the faulty assembly. For example, one failure on the Synthesizer PCA and several failures on the RF Output PCA could indicate that a satisfactory signal is not leaving the Synthesizer PCA. As a result, tests on the RF Output PCA will naturally fail. In this case, the Synthesizer PCA test point description in the box would help isolate the source of the problem.

The Synthesizer PCA test failures relating to a single power supply are likely to be caused by the Synthesizer PCA itself, whereas failure of the majority of supplies can indicate a fault with the Power Supply PCA.

Failures of the Leveling Head can be caused by faults on the RF Output PCA. To determine if a Leveling Head is at fault, plug it into a known good Base and test it again.

Tests are performed in a sequence which, where possible, tests one aspect of functionality before testing dependent functions. When multiple failures are reported, the earlier failures are more likely to be indicative of the true source of a problem.

Most tests operate by measuring a dc voltage at an indicated point. In many cases, the test description indicates that a specific frequency and/or amplitude of signal is being routed through a particular section of circuitry which results in the voltage being measured. In some cases, the test also checks to ensure specific phase-locked loops are locked. Some other tests will not involve measuring a voltage, but will instead be doing a more complex algorithmic check (for example, a memory test).

Some of the tests, identified by a test name containing the letter M in the schematic sequence number (for example, S01.M01) are math tests. These math tests compare results of two or more other tests. Math tests allow properties that cannot be directly measured to be tested. If the tests, on which the calculations are based, have failed, the associated math test(s) will also fail.

As part of the self-test operation, the unit enters operating modes not directly accessible as part of the normal functioning of the unit. Self-test failures at specific frequencies and/or amplitudes should not be taken to imply the unit will operate correctly outside these areas in normal use.

Some problems cannot be detected or diagnosed with self test alone and can require additional manual testing with external equipment.

Firmware Upgrade

Note

The latest version of the firmware is available for download on the Fluke Calibration web site, http://www.flukecal.com. See the Main Product and Support pages to access the download link.

Note

Do not shut off the power during the firmware installation. The Product can cease functioning if its power is interrupted during the firmware install operation.

The firmware within the Product is stored in flash and can be restored or upgraded by transmission over a serial link from a PC to the Product.

Equipment Required for the Restore or Upgrade

These items are required to perform a firmware restore or upgrade:

- A PC running Microsoft Windows 7 or Windows 8. This computer must have either a 9-pin serial port (RS232) or a USB port.
- Using the serial port requires a null modem serial cable with a female DB-9 connector at each end. The pin assignments of the serial cable (RS232) are as follows:
  - PC pin 2 <=> Product pin 3
  - PC pin 3 <=> Product pin 2
  - PC pin 5 <=> Product pin 5

  Connect only the pins above.

  A USB port requires a USB-to-serial converter with a male DB-9 RS232 connector. Use the serial cable above to connect the USB converter to the Product. If the USB-to-serial converter needs a software driver, install the driver on the PC before beginning the firmware upgrade.

Firmware Installation

Use this 3-stage procedure to install the firmware:

- Stage 1 - Configure the Product for upgrade.
- Stage 2 - Upload the firmware.
- Stage 3 - Restore the Product to normal operation.

Stage 1

1. Power off the Product.
2. Connect the Product and PC together using the RS232 cable (the Product's RS232 port is on the rear panel).

   Or, if using USB, connect together the PC, and the USB converter using a USB cable, and then connect together the USB converter and the Product using the RS232 cable.
3. Use the FACTORY SET dip switches on the Product back panel to configure the Product for file uploading; set dip switch 6 to its up position.
4. Turn on the Product. A yellow screen with an empty progress bar should appear on the screen of the Product.
5. The firmware can be downloaded from the Fluke Calibration website. Execute the file from the download location.

   Note

   This firmware update process runs a stand-alone .EXE application and does not install any files to the PC.
6. The **PC** loader application automatically looks for the Product on serial port COM1. If the Product is located, then the Serial Port Name dropdown box is grayed out and the message Connection Established is shown in the message box. Proceed to Stage 2.
7. If the **PC** loader application has not found the Product automatically, ensure that the correct serial port is selected (USB users should also find their converter listed here too) and press the Connect button to retry. It can be necessary to power cycle the Product again (a yellow screen with empty progress bar will re-appear).

Stage 2

1. Ensure a link has been established between the PC application and the Product.

   The application status box indicates when a connection is established and the software version of the application. A connection is considered ready when the line Connection Established.

2. Press Next.

   The PC application automatically uploads the necessary firmware components. A progress bar gives an indication of the status.

   The Product also shows a progress bar for erasure and uploading of the firmware components.

   “Upgrade complete: All files transferred successfully” shows on the PC install screen when the upgrade process is finished.

Stage 3

1. Close the PC application by selecting finish (or pressing the close icon).
2. Restore normal Product operation by setting switch 6 (of the FACTORY SET dip switches) back in its down position.
3. Power cycle the Product.

The new version of the firmware shows on the start-up screen (and can also be viewed on the setup screen).

Chapter 6
Lists of Replaceable Parts

Introduction

This chapter contains an illustrated list of replaceable parts for the Product to the board level only. Each item is accompanied by an illustration showing the location of each part.

How to Obtain Parts

Electrical components may be ordered from Fluke Calibration and its authorized representatives by using the part number under the heading Fluke Stock No. To order components directly, see “Contact Fluke Calibration”. Parts price information is available from the Fluke Calibration or its representatives.

To ensure prompt delivery of the correct part, include the following information when you place an order:

- Fluke stock number
- Description (as given under the Description heading)
- Quantity
- Part number and revision level of the PCA containing the part
- Instrument model and serial number

Replaceable Parts Lists

The following tables list the replaceable parts for the 96000 RF Reference Source. Parts are listed by assembly or kit; alphabetized by reference designator. Each assembly is accompanied by an illustration showing the location of each part and its reference designator. The parts lists give the following information:

- Reference designator
- An indication if the part is subject to damage by static discharge
- Description
- Fluke stock number
- Total quantity
- Any special notes (for example, factory-selected part)

⚠ Caution

To prevent possible damage to the product or to equipment under test, know that a * symbol indicates a device that may be damaged by static discharge.

Table 6-1. Final Assembly

Item Number	Description	Fluke Stock Number	Quantity
1	TOP COVER	2650628	1
2*	RF OUTPUT PCA (INCLUDING SCREENS)	4545579	2
3*	50 OHM LEVELING HEAD (96040A-50)	43386591	1
	75 OHM LEVELING HEAD (96040A-75)	4338600	1
4*	27 GHz CONTROL PCA	4545568	1
5*	ATTENUATOR KIT	4338639	1
6*	SYNTHESIZER PCA (INCLUDING SCREENS)	4545436	1
7	AIR FILTER	3595790	1
8	COAXIAL RELAY	2650465	1
9	COAXIAL RELAY	2650465	1
10	HANDLE	3468883	4
11	SWITCH MODE POWER SUPPLY	4545587	1
12 & 20	KEYPAD PCA, REAR INTERCONNECTION PCA	4545546	1
13	LOW VOLTAGE TRANSFORMER ASSEMBLY	4545413	1
16	FAN	4161447	2
17*	DIGITAL PCA	4341996	1
18	FRONT BEZEL (96270A)	4545460	1
	FRONT BEZEL (96040A)	4545505	1
19*	DISPLAY	4545531	1
21	FOOT	868786	4
22	BOTTOM COVER	2650619	1

23	SIDE EXTRUSION	2650655	2
24	SIDE TRIM	2650637	2
25	TILT STAND BAIL	2650711	2
26	DISPLAY WINDOW	4193979	1
27	KEYPAD	4545472	1
28	SHEET METAL KIT	4545451	1
Not shown	DECAL PRODUCT BADGE 96040A	4545510	1
	DECAL PRODUCT BADGE 96270A	4545485	1
	DECAL TERMINAL 96040A	4545522	1
	DECAL TERMINAL 96270A	4545497	1
	CABLE DUAL USB & LED 96270A	4593522	1
	KIT COAXIAL CABLE 96270A	4545449	1
	KIT COAXIAL CABLE 96040A	4593365	1
	KIT HF LEVELLING	4338617	1
	KIT CONNECTOR	4338656	1
	FUSE 5A 250V	2650730	2
	SMA ATTENUATOR	4196948	3
	96000 Series Manuals CD (includes Operators Manual)	4421591	1

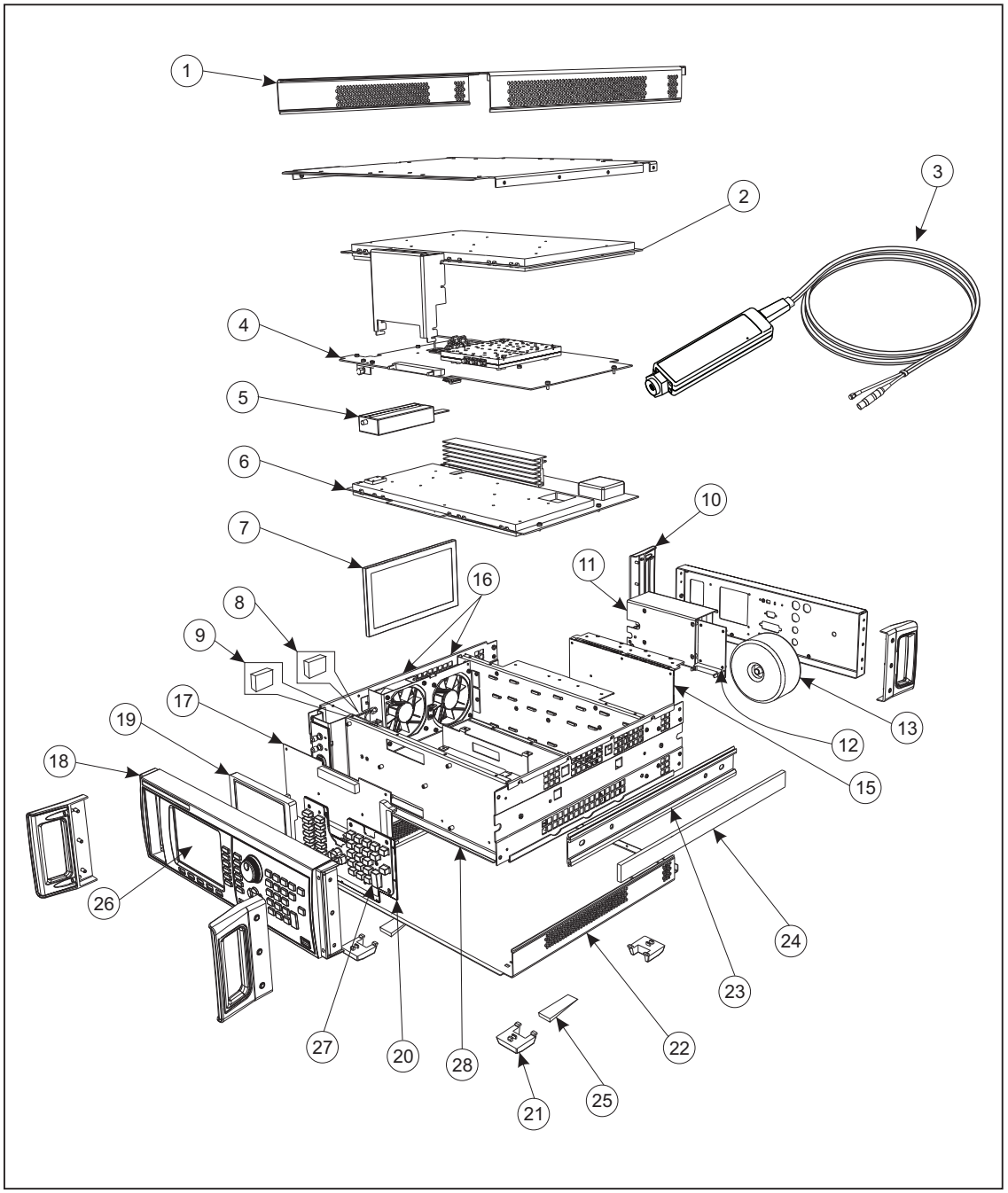

Figure 6-1. Final Assembly

Appendix A
Performance Test Record

Performance Test Record

Model: 96040A _____ 96270A_____

(Base) _____ (50 Ω) _____ (75 Ω) _____

Date: _____ Temperature _____

Reference Frequency Accuracy (96040A and 96270A)

Use a frequency counter and external frequency reference to make the measurements shown in Table A-1.

Table A-1. Reference Frequency Accuracy Test

Frequency	Actual	Tolerance (After 24 hour warm-up)
10 MHz		±0.05 ppm

Frequency Accuracy (96040A and 96270A)

Use a high resolution frequency counter, spectrum analyzer and external frequency reference to make the measurements shown in Table A-2.

Table A-2. Frequency Accuracy Test

Frequency	Actual	Tolerance (After 24 hour warm-up)
10 kHz		±0.505 mHz
10 MHz		±0.5 Hz
30 MHz		±1.5 Hz
50 MHz		±2.5 Hz
100 MHz		±5.0 Hz
500 MHz		±25.0 Hz
1 GHz		±50.0 Hz
2 GHz		±100.0 Hz
3 GHz		±135.0 Hz
4 GHz		±200.0 Hz

Harmonics and Spurious Signal Content – Levelling Head (96040A and 96270A)

Use a high performance spectrum analyzer to make the measurements shown in Tables A-3 and A-4.

Table A-3. Harmonics Test

Output		2nd Harmonic			3rd Harmonic		
Level	**Frequency**	**Freq**	**Limit**	**Actual**	**Freq**	**Limit**	**Actual**
+24 dBm	20 kHz	40 kHz	-60 dBc		60 kHz	-60 dBc	
	2.74 MHz	5 MHz	-60 dBc		7.5 MHz	-60 dBc	
	5.5 MHz	11 MHz	-60 dBc		16.5 MHz	-60 dBc	
	11 MHz	22 MHz	-60 dBc		33 MHz	-60 dBc	
	22 MHz	44 MHz	-60 dBc		66 MHz	-60 dBc	
	44 MHz	88 MHz	-60 dBc		132 MHz	-60 dBc	
	62.5 MHz	125 MHz	-60 dBc		187.5 MHz	-60 dBc	
	88 MHz	176 MHz	-60 dBc		264 MHz	-60 dBc	
	125 MHz	250 MHz	-60 dBc		375 MHz	-60 dBc	
+20 dBm	250 MHz	500 MHz	-60 dBc		750 MHz	-60 dBc	
	354 MHz	708 MHz	-60 dBc		1.062 GHz	-60 dBc	
	500 MHz	1 GHz	-60 dBc		1.5 GHz	-60 dBc	
	714 MHz	1.428 GHz	-60 dBc		2.142 GHz	-60 dBc	
	1 GHz	2 GHz	-60 dBc		3 GHz	-60 dBc	
	1.4 GHz	2.8 GHz	-55 dBc		4.2 GHz	-55 dBc	
+14 dBm	1.8 GHz	3.6 GHz	-55 dBc		5.4 GHz	-55 dBc	
	2.7 GHz	5.4 GHz	-55 dBc		8.1 GHz	-55 dBc	
	4.024 GHz	8 GHz	-55 dBc		12 GHz	-55 dBc	

Table A-4. Spurious Signal Content Test

Frequency	Spurious Level	Limit
2.150 003 GHz		< -66 dBc
2.275 003 GHz		< -66 dBc
2.425 003 GHz		< -66 dBc
2.500 003 GHz		< -66 dBc
2.650 003 GHz		< -66 dBc
2.825 003 GHz		< -66 dBc
2.999 997 GHz		< -66 dBc
3.149 997 GHz		< -66 dBc
3.424 997 GHz		< -66 dBc
3.499 997 GHz		< -66 dBc
3.649 997 GHz		< -66 dBc
3.774 997 GHz		< -66 dBc
3.924 997 GHz		< -66 dBc
3.999 997 GHz		< -66 dBc

Phase Noise (96040A and 96270A, Optional)

Use a signal source analyzer to make the measurements shown in Table A-5.

Table A-5. Phase Noise Test

Output	Offset	Actual	Specification	Uncertainty	Limit
125 MHz	100 Hz		< -121 dBc/Hz		
	1 kHz		< -141 dBc/Hz		
	10 kHz		< -148 dBc/Hz		
	100 kHz		< -151 dBc/Hz		
	1 MHz		< -153 dBc/Hz		
	10 MHz		< -155 dBc/Hz		
1 GHz	100 Hz		< -104 dBc/Hz		
	1 kHz		< -130 dBc/Hz		
	10 kHz		< -140 dBc/Hz		
	100 kHz		< -141 dBc/Hz		
	1 MHz		< -148 dBc/Hz		
	10 MHz		< -152 dBc/Hz		

Modulation (96040A and 96270A, Optional)

Use a high performance measuring receiver to make the measurements shown in Tables A-6, A-7, A-8, and A-9.

Table A-6. Amplitude Modulation Rate Test

Level	Frequency	Modulation Rate	Depth	Actual	Tolerance
+10 dBm	30 MHz	20 kHz	50 %		±1 Hz
		100 kHz	50 %		±10.0 Hz

Table A-7. Amplitude Modulation Depth Test

Level	Frequency	Modulation Rate	Depth	Actual	Tolerance
+14 dBm	125 MHz	1 kHz	90 %		±2.5 %
		100 kHz	90 %		±2.5 %
	1 GHz	1 kHz	90 %		±2.5 %
		20 kHz	90 %		±2.5 %

Table A-8. Frequency Modulation Rate Test

Level	Frequency	Modulation Rate	Deviation	Actual	Tolerance
+13 dBm	62.5 MHz	400 Hz	30 kHz		±0.11 Hz
	62.5 MHz	300 kHz	1 MHz		±10 Hz

Table A-9. Frequency Modulation Deviation Test

Level	Frequency	Modulation Rate	Deviation	Actual	Tolerance
+13 dBm	125 MHz	400 Hz	10 kHz		±300 Hz
		100 kHz	10 kHz		±300 Hz
		400 Hz	300 kHz		±9.0 kHz
		100 kHz	300 kHz		±9.0 kHz
	1 GHz	400 Hz	1 MHz		±30 kHz
		300 kHz	1 MHz		±30 kHz

Frequency Counter Accuracy (96040A and 96270A)

Use a frequency standard to make the measurements shown in Tables A-10 and A-11.

Table A-10. Frequency Counter Accuracy Test

Frequency	Actual	Tolerance (After 24 hour warm-up)
10 MHz		±0.051 ppm

Table A-11. Alternative Frequency Counter Functional Test

Frequency	Actual	Tolerance
10 MHz		±1 digit

Level Accuracy - 50 Ω Levelling Head (96040A and 96270A)

Use an AC Measurement Standard, a power meter and power sensors, and a high performance spectrum analyzer/measuring receiver to make the measurements shown in Tables A-16 and A-17.

Table A-12. Level Accuracy (50 Ω) Test

Level	Frequency	Actual	Tolerance
+16 dBm	1 kHz		±0.03 dB
	20 kHz		±0.03 dB
	100 kHz		±0.03 dB
	10 MHz		±0.05 dB
	100 MHz		±0.05 dB
	300 MHz		±0.07 dB
	1.4 GHz		±0.2 dB
+13 dBm	1 kHz		±0.03 dB
	20 kHz		±0.03 dB
	100 kHz		±0.03 dB
	10 MHz		±0.05 dB
	100 MHz		±0.05 dB
	300 MHz		±0.07 dB
	1.4 GHz		±0.2 dB
	3 GHz		±0.3 dB
	4 GHz		±0.3 dB
+3 dBm	1 kHz		±0.03 dB
	20 kHz		±0.03 dB
	100 kHz		±0.03 dB
	10 MHz		±0.05 dB
	100 MHz		±0.05 dB
	300 MHz		±0.07 dB
	1.4 GHz		±0.2 dB
	3 GHz		±0.3 dB
	4 GHz		±0.3 dB

Table 12. Level Accuracy (50 Ω) Test (cont).

Level	Frequency	Actual	Tolerance
-7 dBm	1 kHz		±0.03 dB
	20 kHz		±0.03 dB
	100 kHz		±0.03 dB
	10 MHz		±0.05 dB
	100 MHz		±0.05 dB
	300 MHz		±0.07 dB
	1.4 GHz		±0.2 dB
	3 GHz		±0.3 dB
	4 GHz		±0.3 dB
-17 dBm	1 kHz		±0.03 dB
	20 kHz		±0.03 dB
	100 kHz		±0.03 dB
	10 MHz		±0.05 dB
	100 MHz		±0.05 dB
	300 MHz		±0.07 dB
	1.4 GHz		±0.2 dB
	3 GHz		±0.3 dB
	4 GHz		±0.3 dB
-27 dBm	1 kHz		±0.03 dB
	20 kHz		±0.03 dB
	100 kHz		±0.03 dB
	10 MHz		±0.05 dB
	100 MHz		±0.05 dB
	300 MHz		±0.07 dB
	1.4 GHz		±0.2 dB
	3 GHz		±0.5 dB
	4 GHz		±0.5 dB

Table 12. Level Accuracy (50 Ω) Test (cont).

Level	Frequency	Actual	Tolerance
-37 dBm	1 kHz		±0.03 dB
	20 kHz		±0.03 dB
	100 kHz		±0.03 dB
	10 MHz		±0.05 dB
	100 MHz		±0.05 dB
	300 MHz		±0.07 dB
	1.4 GHz		±0.2 dB
	3 GHz		±0.3 dB
	4 GHz		±0.5 dB
-47 dBm	1 kHz		±0.03 dB
	20 kHz		±0.03 dB
	100 kHz		±0.03 dB
	10 MHz		±0.05 dB
	100 MHz		±0.05 dB
	300 MHz		±0.07 dB
	1.4 GHz		±0.2 dB
	3 GHz		±0.3 dB
	4 GHz		±0.5 dB
-57 dBm	100 kHz		±0.2 dB
	10 MHz		±0.1 dB
	100 MHz		±0.1 dB
	300 MHz		±0.1 dB
	1.4 GHz		±0.4 dB
	3 GHz		±0.5 dB
	4 GHz		±0.5 dB
-66dBm	100 kHz		±0.2 dB
	10 MHz		±0.1 dB
	100 MHz		±0.1 dB
	300 MHz		±0.1 dB
	1.4 GHz		±0.4 dB
	3 GHz		±0.5 dB
	4 GHz		±0.5 dB

Table 12. Level Accuracy (50 Ω) Test (cont).

Level	Frequency	Actual	Tolerance
-75 dBm	100 kHz		±0.5 dB
	10 MHz		±0.1 dB
	100 MHz		±0.1 dB
	300 MHz		±0.3 dB
	1.4 GHz		±0.5 dB
	3 GHz		±1.0 dB
	4 GHz		±1.0 dB
-85 dBm	100 kHz		±0.5 dB
	10 MHz		±0.3 dB
	100 MHz		±0.3 dB
	300 MHz		±0.5 dB
	1.4 GHz		±1.0 dB
	3 GHz		±1.0 dB
	4 GHz		±1.0 dB
-95 dBm	10 MHz		±0.7 dB
	100 MHz		±0.7 dB
	300 MHz		±1.5 dB
	1.4 GHz		±1.5 dB

Table A-13. Optional Ultra-Low Level Accuracy (50 Ω) Test

Level	Frequency	Actual	Tolerance
-105 dBm	10 MHz		±0.7 dB
	100 MHz		±0.7 dB
	300 MHz		±1.5 dB
	1.4 GHz		±1.5 dB
-115 dBm	10 MHz		±0.7 dB
	100 MHz		±0.7 dB
	300 MHz		±1.5 dB
	1.4 GHz		±1.5 dB
-124 dBm	10 MHz		±0.7 dB
	100 MHz		±0.7 dB
	300 MHz		±1.5 dB
	1.4 GHz		±1.5 dB

Attenuation Accuracy - 50 Ω Levelling Head (96040A and 96270A)

Use a high performance measuring receiver to make the measurements shown in Table A-14 relative to +10 dBm.

Table A-14. Attenuation Accuracy (50 Ω) Test

Frequency	Attenuation	Actual	Specification	Uncertainty	Tolerance
10 MHz	0 dB	---	Reference	Reference	Reference
	-7 dB		±0.02 dB		
	-17 dB		±0.02 dB		
	-27 dB		±0.02 dB		
	-37 dB		±0.02 dB		
	-47 dB		±0.02 dB		
	-57 dB		±0.03 dB		
	-67 dB		±0.05 dB		
	-76 dB		±0.07 dB		
	-85 dB		±0.07 dB		
	-95 dB		±0.15 dB		
	-105 dB		±0.15 dB		
50 MHz	0 dB	---	Reference	Reference	Reference
	-7 dB		±0.02 dB		
	-17 dB		±0.02 dB		
	-27 dB		±0.02 dB		
	-37 dB		±0.02 dB		
	-47 dB		±0.02 dB		
	-57 dB		±0.03 dB		
	-67 dB		±0.05 dB		
	-76 dB		±0.07 dB		
	-85 dB		±0.07 dB		
	-95 dB		±0.15 dB		
	-105 dB		±0.15 dB		

Table A-14. Attenuation Accuracy (50 Ω) Test (cont.)

Frequency	Attenuation	Actual	Specification	Uncertainty	Tolerance
100 MHz	0 dB	---	Reference	Reference	Reference
	-7 dB		±0.02 dB		
	-17 dB		±0.02 dB		
	-27 dB		±0.02 dB		
	-37 dB		±0.02 dB		
	-47 dB		±0.02 dB		
	-57 dB		±0.03 dB		
	-67 dB		±0.05 dB		
	-76 dB		±0.07 dB		
	-85 dB		±0.07 dB		
	-95 dB		±0.15 dB		
	-105 dB		±0.15 dB		

VSWR - 50 Ω Levelling Head (96040A and 96270A, Optional)

Use a directional bridge and a spectrum analyzer to make the measurements shown in Table A-15.

Table A-15. VSWR (50 Ω) Test

Level	Frequency	Actual	Tolerance
+13 dBm	100 MHz		<1.05
	2 GHz		<1.10
	3 GHz		<1.15
	4GHz		<1.20
+3 dBm	100 MHz		<1.05
	2 GHz		<1.10
	3 GHz		<1.15
	4GHz		<1.20
-7 dBm	100 MHz		<1.05
	2 GHz		<1.10
	3 GHz		<1.15
	4GHz		<1.20

Level Accuracy - 75 Ω Levelling Head (96040A and 96270A)

Use an AC Measurement Standard, a power meter and power sensors, and a high performance spectrum analyzer/measuring receiver to make the measurements shown in Tables A-16 and A-17.

Table A-16. Level Accuracy (75 Ω) Test

Level	Frequency	Actual	Tolerance
+10 dBm	1 kHz		±0.12 dB
	20 kHz		±0.12 dB
	100 kHz		±0.12 dB
	10 MHz		±0.12 dB
	100 MHz		±0.12 dB
	300 MHz		±0.15 dB
	1.4 GHz		±0.25 dB
+7 dBm	1 kHz		±0.12 dB
	20 kHz		±0.12 dB
	100 kHz		±0.12 dB
	10 MHz		±0.12 dB
	100 MHz		±0.12 dB
	300 MHz		±0.15 dB
	1.4 GHz		±0.25 dB
	2 GHz		±0.3 dB
-3 dBm	1 kHz		±0.12 dB
	20 kHz		±0.12 dB
	100 kHz		±0.12 dB
	10 MHz		±0.12 dB
	100 MHz		±0.12 dB
	300 MHz		±0.15 dB
	1.4 GHz		±0.25 dB
	2 GHz		±0.3 dB

Table A-16. Level Accuracy (75 Ω) Test (cont.)

Level	Frequency	Actual	Tolerance
-13 dBm	1 kHz		±0.12 dB
	20 kHz		±0.12 dB
	100 kHz		±0.12 dB
	10 MHz		±0.12 dB
	100 MHz		±0.12 dB
	300 MHz		±0.15 dB
	1.4 GHz		±0.25 dB
	2 GHz		±0.3 dB
-23 dBm	1 kHz		±0.12 dB
	20 kHz		±0.12 dB
	100 kHz		±0.12 dB
	10 MHz		±0.12 dB
	100 MHz		±0.12 dB
	300 MHz		±0.15 dB
	1.4 GHz		±0.25 dB
	2 GHz		±0.3 dB
-33 dBm	1 kHz		±0.15 dB
	20 kHz		±0.15 dB
	100 kHz		±0.15 dB
	10 MHz		±0.15 dB
	100 MHz		±0.15 dB
	300 MHz		±0.2 dB
	1.4 GHz		±0.5 dB
	2 GHz		±0.5 dB
-43 dBm	1 kHz		±0.15 dB
	20 kHz		±0.15 dB
	100 kHz		±0.15 dB
	10 MHz		±0.15 dB
	100 MHz		±0.15 dB
	300 MHz		±0.2 dB
	1.4 GHz		±0.5 dB
	2 GHz		±0.5 dB

Table A-16. Level Accuracy (75 Ω) Test (cont.)

Level	Frequency	Actual	Tolerance
-53 dBm	100 kHz		±0.15 dB
	10 MHz		±0.15 dB
	100 MHz		±0.15 dB
	300 MHz		±0.2 dB
	1.4 GHz		±0.5 dB
	2 GHz		±0.5 dB
-63 dBm	100 kHz		±0.2 dB
	10 MHz		±0.2 dB
	100 MHz		±0.2 dB
	300 MHz		±0.2 dB
	1.4 GHz		±0.5 dB
	2 GHz		±0.5 dB
-72 dBm	100 kHz		±0.2 dB
	10 MHz		±0.2 dB
	100 MHz		±0.2 dB
	300 MHz		±0.2 dB
	1.4 GHz		±0.5 dB
	2 GHz		±0.5 dB

Table A-16. Level Accuracy (75 Ω) Test (cont.)

Level	Frequency	Actual	Tolerance
-81 dBm	100 kHz		±0.7 dB
	10 MHz		±0.7 dB
	100 MHz		±0.7 dB
	300 MHz		±0.7 dB
	1.4 GHz		±1.0 dB
	2 GHz		±1.0 dB
-91 dBm	100 kHz		±0.7 dB
	10 MHz		±0.7 dB
	100 MHz		±0.7 dB
	300 MHz		±0.7 dB
	1.4 GHz		±1.0 dB
	2 GHz		±1.0 dB
-101 dBm	10 MHz		±1.5 dB
	100 MHz		±1.5 dB
	300 MHz		±1.5 dB
	1.4 GHz		±1.5 dB
	2 GHz		±1.5 dB

Table A-17. Optional Ultra-Low Level Accuracy (75 Ω) Test

Level	Frequency	Actual	Tolerance
-111 dBm	10 MHz		±1.5 dB
	100 MHz		±1.5 dB
	300 MHz		±1.5 dB
	1.4 GHz		±1.5 dB
	2 GHz		±1.5 dB
-121 dBm	10 MHz		±1.5 dB
	100 MHz		±1.5 dB
	300 MHz		±1.5 dB
	1.4 GHz		±1.5 dB
	2 GHz		±1.5 dB

Attenuation Accuracy - 75 Ω Levelling Head (96040A and 96270A)

Use a high performance measuring receiver to make the measurements shown in Table A-18, relative to +10 dBm.

Table A-18. Attenuation Accuracy (75 Ω) Test

Frequency	Attenuation	Actual	Specification	Uncertainty	Tolerance
10 MHz	0 dB	---	Reference	Reference	Reference
	-3 dB		±0.07 dB		
	-13 dB		±0.07 dB		
	-23 dB		±0.07 dB		
	-33 dB		±0.07 dB		
	-43 dB		±0.1 dB		
	-53 dB		±0.1 dB		
	-63 dB		±0.1 dB		
	-73 dB		±0.2 dB		
	-82 dB		±0.2 dB		
	-91 dB		±0.2 dB		
	-101 dB		±0.4 dB (Typ)		
50 MHz	0 dB	---	Reference	Reference	Reference
	-3 dB		±0.07 dB		
	-13 dB		±0.07 dB		
	-23 dB		±0.07 dB		
	-33 dB		±0.07 dB		
	-43 dB		±0.1 dB		
	-53 dB		±0.1 dB		
	-63 dB		±0.1 dB		
	-73 dB		±0.2 dB		
	-82 dB		±0.2 dB		
	-91 dB		±0.2 dB		
	-101 dB		±0.4 dB (Typ)		

Table A-18. Attenuation Accuracy (75 Ω) Test (cont.)

Frequency	Attenuation	Actual	Specification	Uncertainty	Tolerance
100 MHz	0 dB	---	Reference	Reference	Reference
	-3 dB		±0.07 dB		
	-13 dB		±0.07 dB		
	-23 dB		±0.07 dB		
	-33 dB		±0.07 dB		
	-43 dB		±0.1 dB		
	-53 dB		±0.1 dB		
	-63 dB		±0.1 dB		
	-73 dB		±0.2 dB		
	-82 dB		±0.2 dB		
	-91 dB		±0.2 dB		
	-101 dB		±0.4 dB (Typ)		

VSWR - 75 Ω Levelling Head (96040A and 96270A, Optional)

Use a directional bridge and a spectrum analyzer to make the measurements shown in Table A-19.

Table A-19. VSWR (75 Ω) Test

Level	Frequency	Actual	Tolerance
+7 dBm	500 MHz		<1.1
	1 GHz		<1.2
	2 GHz		<1.3
-3 dBm	500 MHz		<1.1
	1 GHz		<1.2
	2 GHz		<1.3
-13 dBm	500 MHz		<1.1
	1 GHz		<1.2
	2 GHz		<1.3

Level Accuracy - Microwave Output (96270A)

Use an AC Measurement Standard, a power meter and power sensors, and a high performance spectrum analyzer/measuring receiver to make the measurements shown in Tables A-20 and A-21.

Table A-20. 96270A Microwave Output Level Accuracy Test

Level	Frequency	Actual	Typical Tolerance
+16 dBm	1 kHz		±0.5 dB
	100 kHz		±0.5 dB
	10 MHz		±0.5 dB
	100 MHz		±0.5 dB
	1 GHz		±0.5 dB
	4.024 GHz		±1.0 dB
	10 GHz		±1.0 dB
	15 GHz		±1.0 dB
	20 GHz		±1.0 dB
	26.4 GHz		±1.0 dB
+13 dBm	1 kHz		±0.5 dB
	100 kHz		±0.5 dB
	10 MHz		±0.5 dB
	100 MHz		±0.5 dB
	1 GHz		±0.5 dB
	4.024 GHz		±1.0 dB
	10 GHz		±1.0 dB
	15 GHz		±1.0 dB
	20 GHz		±1.0 dB
	26.4 GHz		±1.0 dB
+3 dBm	1 kHz		±0.5 dB
	100 kHz		±0.5 dB
	10 MHz		±0.5 dB
	100 MHz		±0.5 dB
	1 GHz		±0.5 dB
	4.024 GHz		±1.0 dB
	10 GHz		±1.0 dB
	15 GHz		±1.0 dB
	20 GHz		±1.0 dB
	26.4 GHz		±1.0 dB

Table A-21. 96270A Non Low Level Microwave Output Option Additional Level Accuracy Test Points

Level	Frequency	Actual	Typical Tolerance
-4 dBm	1 kHz		±0.5 dB
	100 kHz		±0.5 dB
	10 MHz		±0.5 dB
	100 MHz		±0.5 dB
	1 GHz		±0.5 dB
	4.024 GHz		±1.0 dB
	10 GHz		±1.0 dB
	15 GHz		±1.0 dB
	20 GHz		±1.0 dB
	26.4 GHz		±1.0 dB

Level Accuracy - Low Level Microwave Output Option Additional Points (96270A)

Use an AC Measurement Standard, a power meter and power sensors, and a high performance spectrum analyzer/measuring receiver to make the measurements shown in Table A-22.

Table A-22. 96270A Low Level Microwave Output Option Additional Level Accuracy Test Points

Level	Frequency	Actual	Typical Tolerance
-7 dBm	1 kHz		±2.0 dB
	100 kHz		±2.0 dB
	10 MHz		±2.0 dB
	100 MHz		±2.0 dB
	1 GHz		±2.0 dB
	4.024 GHz		±2.0 dB
	10 GHz		±2.0 dB
	15 GHz		±2.0 dB
	20 GHz		±2.0 dB
	26.4 GHz		±2.0 dB
-17 dBm	1 kHz		±2.0 dB
	100 kHz		±2.0 dB
	10 MHz		±2.0 dB
	100 MHz		±2.0 dB
	1 GHz		±2.0 dB
	4.024 GHz		±2.0 dB
	10 GHz		±2.0 dB
	15 GHz		±2.0 dB
	20 GHz		±2.0 dB
	26.4 GHz		±2.0 dB
-27 dBm	1 kHz		±2.0 dB
	100 kHz		±2.0 dB
	10 MHz		±2.0 dB
	100 MHz		±2.0 dB
	1 GHz		±2.0 dB
	4.024 GHz		±2.0 dB
	10 GHz		±2.0 dB
	15 GHz		±2.0 dB
	20 GHz		±2.0 dB
	26.4 GHz		±2.0 dB

96270A Low Level Microwave Output Option Level Accuracy Additional Level Accuracy Test Points (cont).

Level	Frequency	Actual	Typical Tolerance
-37 dBm	1 kHz		±2.0 dB
	100 kHz		±2.0 dB
	10 MHz		±2.0 dB
	100 MHz		±2.0 dB
	1 GHz		±2.0 dB
	4.024 GHz		±2.0 dB
	10 GHz		±2.0 dB
	15 GHz		±2.0 dB
	20 GHz		±2.0 dB
	26.4 GHz		±2.0 dB
-47 dBm	1 kHz		±2.0 dB
	100 kHz		±2.0 dB
	10 MHz		±2.0 dB
	100 MHz		±2.0 dB
	1 GHz		±2.0 dB
	4.024 GHz		±2.0 dB
	10 GHz		±2.0 dB
	15 GHz		±2.0 dB
	20 GHz		±2.0 dB
	26.4 GHz		±2.0 dB
-57 dBm	100 kHz		±2.0 dB
	10 MHz		±2.0 dB
	100 MHz		±2.0 dB
	1 GHz		±2.0 dB
	4.024 GHz		±2.0 dB
	10 GHz		±2.0 dB
	15 GHz		±2.0 dB
	20 GHz		±2.0 dB
	26.4 GHz		±2.0 dB

96270A Low Level Microwave Output Option Level Accuracy Additional Level Accuracy Test Points (cont).

Level	Frequency	Actual	Typical Tolerance
-66 dBm	100 kHz		±2.0 dB
	10 MHz		±2.0 dB
	100 MHz		±2.0 dB
	1 GHz		±2.0 dB
	4.024 GHz		±2.0 dB
	10 GHz		±2.0 dB
	15 GHz		±2.0 dB
	20 GHz		±2.0 dB
	26.4 GHz		±2.0 dB
-75 dBm	100 kHz		±2.0 dB
	10 MHz		±2.0 dB
	100 MHz		±2.0 dB
	1 GHz		±2.0 dB
	4.024 GHz		±2.0 dB
	10 GHz		±2.0 dB
	15 GHz		±2.0 dB
	20 GHz		±2.0 dB
	26.4 GHz		±2.0 dB
-85 dBm	100 kHz		±2.0 dB
	10 MHz		±2.0 dB
	100 MHz		±2.0 dB
	1 GHz		±2.0 dB
	4.024 GHz		±2.0 dB
	10 GHz		±2.0 dB
	15 GHz		±2.0 dB
	20 GHz		±2.0 dB
	26.4 GHz		±2.0 dB

Frequency Accuracy – Microwave Output (96270A)

Use a high resolution frequency counter, spectrum analyzer and external frequency reference to make the measurements shown in Table A-23.

Table A-23. Frequency Accuracy Test

Frequency	Actual	Tolerance (After 24 hour warm-up)
10 MHz		±0.5 Hz
1 GHz		±50 Hz
5 GHz		±250 Hz
6.036 GHz		±301.8 Hz
8.048 GHz		±402.4 Hz
9.52 GHz		±476 Hz
10 GHz		±500 Hz
11.32 GHz		±566 Hz
12.072 GHz		±603.6 Hz
13.5 GHz		±200.0 Hz
15 GHz		±750 Hz
16 GHz		±800 Hz
18.108 GHz		±905.4 Hz
19.04 GHz		±952 Hz
20 GHz		±1 kHz
21.84 GHz		±1.090 kHz
22.64 GHz		±1.132 kHz
24 GHz		±1.2 kHz
26.5 GHz		±1.325 kHz

Harmonics, Spurious, and Sub-Harmonic Content – Microwave Output (96270A)

Use a high performance spectrum analyzer to make the measurements shown in Tables A-24 and A-25.

Table A-24. 96270A Microwave Output Harmonics Test

Output		2nd Harmonic			3rd Harmonic		
Level	**Frequency**	**Freq**	**Limit**	**Actual**	**Freq**	**Limit**	**Actual**
+16 dBm	20 kHz	40 kHz	-60 dBc		60 kHz	-60 dBc	
	2.74 MHz	5.48 MHz	-60 dBc		8.22 MHz	-60 dBc	
	5.5 MHz	11 MHz	-60 dBc		16.5 MHz	-60 dBc	
	11 MHz	22 MHz	-60 dBc		33 MHz	-60 dBc	
	22 MHz	44 MHz	-60 dBc		66 MHz	-60 dBc	
	50 MHz	100 MHz	-60 dBc		150 MHz	-60 dBc	
	88 MHz	176 MHz	-60 dBc		264 MHz	-60 dBc	
	125 MHz	250 MHz	-60 dBc		375 MHz	-60 dBc	
	250 MHz	500 MHz	-60 dBc		750 MHz	-60 dBc	
	354 MHz	708 MHz	-60 dBc		1.062 GHz	-60 dBc	
	500 MHz	1 GHz	-60 dBc		1.5 GHz	-60 dBc	
	1 GHz	2 GHz	-60 dBc		3 GHz	-60 dBc	
	1.25 GHz	2.5 GHz	-60 dBc		3.75 GHz	-60 dBc	
	1.4 GHz	2.8 GHz	-55 dBc		4.2 GHz	-55 dBc	
	1.8 GHz	3.6 GHz	-55 dBc		5.4 GHz	-55 dBc	
	2 GHz	4 GHz	-55 dBc		8 GHz	-55 dBc	
	2.7 GHz	5.4 GHz	-55 dBc		8.1 GHz	-55 dBc	
	5 GHz	10 GHz	-55 dBc		15 GHz	-55 dBc	
	9 GHz	18 GHz	-55 dBc		-	-	-
	10 GHz	20 GHz	-55 dBc		-	-	-
	12 GHz	24 GHz	-55 dBc		-	-	-
	13 GHz	26 GHz	-55 dBc		-	-	-

Table A-25. 96270A Microwave Output Sub and Inter-Harmonics Test

Output Frequency	Sub/Inter-Harmonic Level						
	Frequency	Actual	Frequency	Actual	Frequency	Actual	Limit
4.05 GHz	6.075 GHz		-	-	-	-	< -60dBc
6.2 GHz	9.300 GHz		-	-	-	-	< -60dBc
8.3 GHz	4.150 GHz		6.225 GHz		12.450 GHz		< -60dBc
12.0 GHz	3.000 GHz		6.000 GHz		9.000 GHz		< -60dBc
16.0 GHz	4.000 GHz		8.000 GHz		12.000 GHz		< -60dBc
18.5 GHz	4.625 GHz		-	-	-	-	< -60dBc
22.00 GHz	5.500 GHz		-	-	-	-	< -60dBc
27.00 GHz	6.750 GHz		-	-	-	-	< -60dBc

Modulation - Microwave Output (96270A, Optional)

Use a high performance measuring receiver to make the measurements shown in Tables A-26, A-27, A-28, and A-29.

Table A-26. 96270A Microwave Output Amplitude Modulation Rate Test

Level	Frequency	Modulation Rate	Depth	Actual	Tolerance
+10 dBm	30 MHz	20 kHz	50 %		±1.0 Hz
		100 kHz	50 %		±10.0 Hz

Table A-27. 96270A Microwave Output Amplitude Modulation Depth Test

Level	Frequency	Modulation Rate	Depth	Actual	Tolerance
+14 dBm	125 MHz	1 kHz	90 %		±2.8 %
		100 kHz	90 %		±2.8 %
	1 GHz	1 kHz	90 %		±2.8 %
		20 kHz	90 %		±2.8 %

Table A-28. 96270A Microwave Output Frequency Modulation Rate Test

Level	Frequency	Modulation Rate	Deviation	Actual	Tolerance
+13 dBm	62.5 MHz	400 Hz	30 kHz		±10 mHz
		300 kHz	1 MHz		±10 Hz

Table A-29. 96270A Microwave Output Frequency Modulation Deviation Test

Level	Frequency	Modulation Rate	Deviation	Actual	Tolerance
+13 dBm	125 MHz	400 Hz	10 kHz		±300 Hz
		100 kHz	10 kHz		±300 Hz
		400 Hz	300 kHz		±9.0 kHz
		100 kHz	300 kHz		±9.0 kHz
	1 GHz	400 Hz	1 MHz		±30 kHz
		300 kHz	1 MHz		±30 kHz