FLUKE®

985

Airborne Particle Counter

Getting Started Guide

PN 4136462 (English)
3/2012, Rev. 1, 7/2025
©2012-2025 Fluke Corporation. All rights reserved. Specifications are subject to change without notice. All product names are trademarks of their respective companies.

LIMITED WARRANTY AND LIMITATION OF LIABILITY

Each Fluke product is warranted to be free from defects in material and workmanship under normal use and service. The warranty period is 1 year and begins on the date of shipment. Parts, product repairs, and services are warranted for 90 days. This warranty extends only to the original buyer or end-user customer of a Fluke authorized reseller, and does not apply to fuses, disposable batteries, or to any product which, in Fluke's opinion, has been misused, altered, neglected, contaminated, or damaged by accident or abnormal conditions of operation or handling. Fluke warrants that software will operate substantially in accordance with its functional specifications for 90 days and that it has been properly recorded on non-defective media. Fluke does not warrant that software will be error free or operate without interruption.

Fluke authorized resellers shall extend this warranty on new and unused products to end-user customers only but have no authority to extend a greater or different warranty on behalf of Fluke. Warranty support is available only if product is purchased through a Fluke authorized sales outlet or Buyer has paid the applicable international price. Fluke reserves the right to invoice Buyer for importation costs of repair/replacement parts when product purchased in one country is submitted for repair in another country.

Fluke's warranty obligation is limited, at Fluke's option, to refund of the purchase price, free of charge repair, or replacement of a defective product which is returned to a Fluke authorized service center within the warranty period.

To obtain warranty service, contact your nearest Fluke authorized service center to obtain return authorization information, then send the product to that service center, with a description of the difficulty, postage and insurance prepaid (FOB Destination). Fluke assumes no risk for damage in transit. Following warranty repair, the product will be returned to Buyer, transportation prepaid (FOB Destination). If Fluke determines that failure was caused by neglect, misuse, contamination, alteration, accident, or abnormal condition of operation or handling, including overvoltage failures caused by use outside the product's specified rating, or normal wear and tear of mechanical components, Fluke will provide an estimate of repair costs and obtain authorization before commencing the work. Following repair, the product will be returned to the Buyer transportation prepaid and the Buyer will be billed for the repair and return transportation charges (FOB Shipping Point).

THIS WARRANTY IS BUYER'S SOLE AND EXCLUSIVE REMEDY AND IS IN LIEU OF ALL OTHER WARRANTIES, EXPRESS OR IMPLIED, INCLUDING BUT NOT LIMITED TO ANY IMPLIED WARRANTY OF MERCHANTABILITY OR FITNESS FOR A PARTICULAR PURPOSE. FLUKE SHALL NOT BE LIABLE FOR ANY SPECIAL, INDIRECT, INCIDENTAL OR CONSEQUENTIAL DAMAGES OR LOSSES, INCLUDING LOSS OF DATA, ARISING FROM ANY CAUSE OR THEORY.

Since some countries or states do not allow limitation of the term of an implied warranty, or exclusion or limitation of incidental or consequential damages, the limitations and exclusions of this warranty may not apply to every buyer. If any provision of this Warranty is held invalid or unenforceable by a court or other decision-maker of competent jurisdiction, such holding will not affect the validity or enforceability of any other provision.

Fluke Corporation
6920 Seaway Blvd
Everett WA 98203
U.S.A.

Fluke Europe B.V.
P.O. Box 1186
5602 BD Eindhoven
The Netherlands

11/99

Introduction

The Fluke 985 Airborne Particle Counter (the Product) is a portable instrument that measures and reports air contamination.

The Product stores 10 000 samples in memory and records the date, time, counts, and sample volume of each sample.

Use the supplied USB cable, an Ethernet connection, or a flash USB drive (not supplied) to download data to a PC.

Contact Fluke

Fluke Corporation operates worldwide. For local contact information, go to our website: www.fluke.com.

To register your product, or to view, print, or download the latest manual or manual supplement, go to our website.

+1-425-446-5500 fluke-info@fluke.com

Safety Information

A **Warning** identifies hazardous conditions and procedures that are dangerous to the user. A **Caution** identifies conditions and procedures that can cause damage to the Product or the equipment under test.

Warning

To prevent possible electrical shock, fire, or personal injury:

- **Read all safety information before you use the Product.**
- **Carefully read all instructions.**
- **Do not alter the Product and use only as specified, or the protection supplied by the Product can be compromised.**
- **Do not use the Product if it operates incorrectly.**
- **Do not use the Product if it is altered or damaged.**
- **Have an approved technician repair the Product.**
- **The Product contains a laser device and a rechargeable lithium battery pack. Do not disassemble this Product, it contains no user-serviceable parts.**
- **Do not use the Product if it is altered or damaged.**
- **Disable the Product if it is damaged.**
- **Use the Product only as specified or hazardous laser radiation exposure can occur.**

- **Do not open the Product. The laser beam is dangerous to eyes. Have the Product repaired only by an approved technical site.**
- **Do not look directly into the laser with optical tools (for example, binoculars, telescopes, microscopes). Optical tools can focus the laser and be dangerous to the eye.**
- **Do not use the Product if it operates incorrectly.**
- **Read the entire Users Manual before using the Product.**

Symbols

Table 1 lists the symbols that may be used on the Product or in this document.

Table 1. Symbols

Symbol	Description
	Consult user documentation.
	WARNING. RISK OF DANGER.
	WARNING. HAZARDOUS VOLTAGE. Risk of electric shock.
	WARNING. LASER RADIATION. Risk of eye damage.
CE	Conforms to European Union directives.

Table 1. Symbols (cont.)

Symbol	Description
	This product complies with the WEEE Directive marking requirements. The affixed label indicates that you must not discard this electrical/electronic product in domestic household waste. Product Category: With reference to the equipment types in the WEEE Directive Annex I, this product is classed as category 9 "Monitoring and Control Instrumentation" product. Do not dispose of this product as unsorted municipal waste.

Battery

A rechargeable Lithium-ion battery powers the Product. After you unpack and examine the Product, fully charge the battery before the first use. After the initial charge, charge the battery when the battery icon on the screen shows that battery power is low.

To charge the battery:

1. Put the Product on the Charge Base.
2. Connect the ac adapter to a power source.
3. Connect the ac adapter to the dc input socket on the Charge Base.

An amber light on the front of the Charge Base shows that the base is powered. The light changes to green when the Product is connected to the base. If the ac adapter cord is connected to the Product, a green light shows above the power jack.

If the Product is on, the battery icon flashes as the battery charges. The icon is solid (does not flash) when the battery is fully charged. Approximately 3.5 hours is necessary to charge a discharged battery. The battery is not user-serviceable.

Product Overview

This section gives you a brief description of each Product component. See Table 2 and Figure 1 to see the items that are shipped with the Product.

Table 2. Product Components

Item	Description
①	The Product
②	Zero-Count Filter
③	Filter Adapter
④	Probe Cap

Table 2. Product Components (cont.)

Item	Description
⑤	Product Charge Base
⑥	USB Cable
⑦	AC Adapter
⑧	International Power Plug Adapters
⑨	985 Getting Started
⑩	Product Carrying Case

Figure 1. Product Components

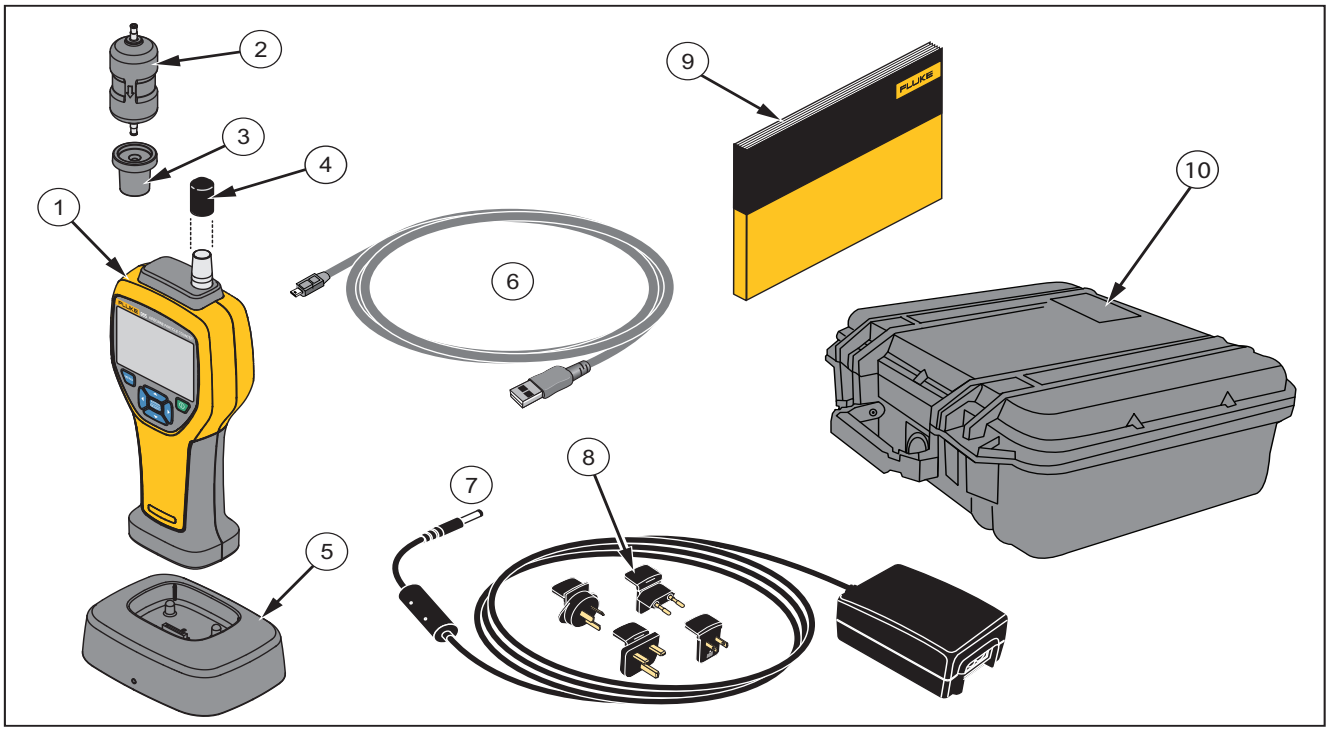

The Buttons

See Table 3 for a description of the Product buttons. For more information on the buttons, see the Users Manual.

Table 3. Buttons

Button	Description
	**Power** - Push to turn the Product ON. Push again and hold for 3 seconds to turn the Product OFF.
	**Menu** - Push to access the Product menus. The Menus are: Sample Screen, Buffered Data Screen, Sample Setup, Communication Setup, and Trend Data. Sample Setup and Communication Setup also have submenus.
	**Enter/Select** - Push to select a menu option. Also use to start and stop a sample when in the Sample Screen.
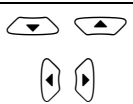	**Navigation** - Push to move through the Product menus, menu selections, and to change values.

Product Connections

Power and data connections are on the bottom of the Product and on the rear of the Charge Base. The Ethernet connection is only available on the base. Table 4 and Figure 2 show you the Product connections.

Table 4. Product Connections

Item	Description
①	Power Charge LED
②	USB Port
③	Base Input
④	Flash USB drive Port
⑤	Tripod Mount
⑥	DC Power Input

Figure 2. Product Connections

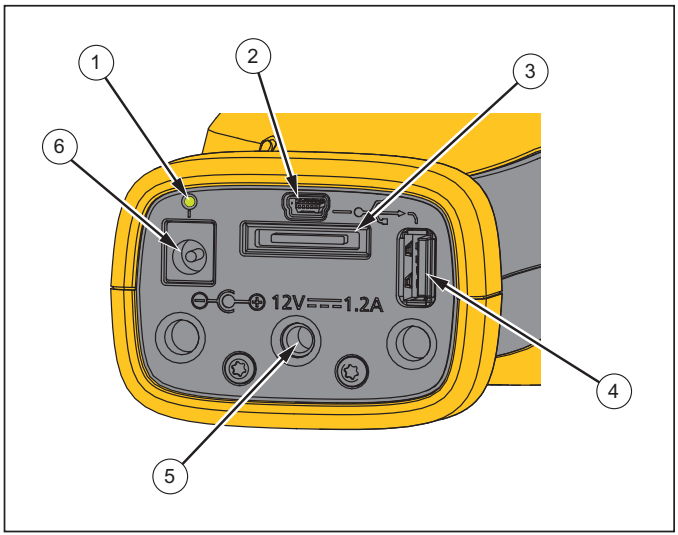

Charge Base Connections

Power and data connections are also on the rear of the Charge Base. The Ethernet connection is only available on the base. Table 5 and Figure 3 show you these connections.

Table 5. Charge Case Connections

Item	Description
①	Ethernet Port
②	DC Power Input
③	USB Port

Figure 3. Charge Base Connections

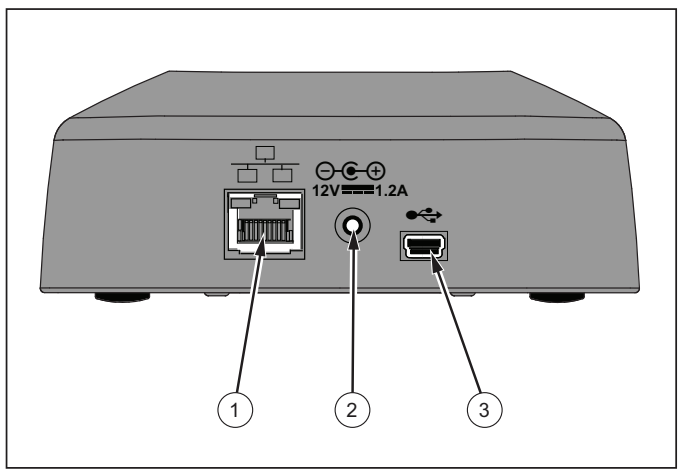

Product Test

Electrical noise, sensor leakage, or other interference can cause the Product to give incorrect data.

To check operation:

1. Attach the Zero-Count Filter.
2. In the Data Display Setup screen, enable the 0.3 µm channel and set Concentration mode to COUNTS.
3. In the Sample Setup screen:
   a. Set the sample time to 5 minutes
   b. Set the hold time to 00:00:00
   c. Set the delay time to 00:00:03
   d. Set the MODE to Automatic
   e. Set the number of CYCLES = 2.
4. Start the Product sampling and let it complete the 2 x 5 minute samples.
5. Examine the particle counts from the sample. Counts must align with these specifications for instrument operation to be verified:

No more than 1 particle >0.3 µm in 5 minutes.

How to Purge the Product Sensor

Particles must be purged (removed) from the Product sensor before use in a clean room or clean environment, and after each high-sampling count.

To purge the sensor:

1. Attach the adapter and the Zero-Count Filter.
2. Set the Product to sample continuously (set the Count Mode to Cumulative.)
3. Start the count procedure. Continue the count procedure until there are no new counts.
4. Remove the Zero-Count Filter for normal operation.

How to Take a Sample

Before you take a sample, make sure that you remove the protective cap. To take a sample, select the Sample screen and push ENTER SELECT. The Product samples with values in the Sample Setup menu. To stop a sample, let the sample procedure complete or push ENTER SELECT again.

Navigation Menu

The navigation menu lets you move through the five different sections of the Product software. To go to the Navigation menu, push MENU. The live navigation icon in the middle of the screen is larger and brighter than the other icons. There are five main menus. See Table 6. The Sample Setup and Communication Setup menus also have submenus. See the Users Manual.

Table 6. Main Menu Icons

Icon	Menu Item
	Sample Screen
	Buffered Data Screen
	Sample Setup

Table 6. Main Menu Icons (cont.)

Icon	Menu Item
	Communication Setup
	Trend Data

Sample Setup Submenus

The Sample Setup Menu is shown in Table 7.

Table 7. Sample Setup Submenu

Icon	Submenu Item
	Alarm Setup
	Data Display Setup
	Location Setup

Communication Setup Submenus

The Communication Setup Menu is shown in Table 8.

Table 8. Communication Submenu Icons

Icon	Submenu item
	General Setup
	Diagnostics
	Login

Sample Screen

The sample screen is the default screen that shows after the Product is turned-on. The screen shows the current sample settings as you take samples. Push ⊙ or ⊙ to select from loaded locations. See Figure 4.

Figure 4. Sample Screen

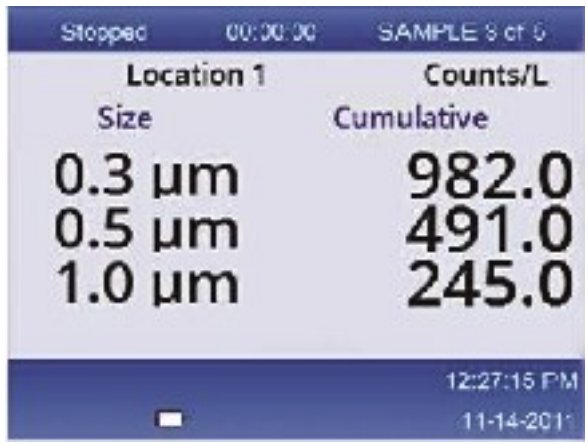

Specifications

General

Particle-Size Range .....(0.3, 0.5, 1.0, 2.0, 5.0, 10.0) µm
Channels 6
Flow Rate.....0.1 cfm (2.83 L/min)
Light Source.....775 nm to 795 nm, 90 mW class 3B laser
Calibration .....PSL particles in air (NIST traceable)
Counting Efficiency .....50 % @ 0.3 µm; 100 % for particles >0.45 µm (per ISO 21501)
Zero Count Level .....1 count / 5 minute (per JIS B9921)
Concentration Limits .....10 % at 4,000,000 per cubic ft (per ISO 21501)
Count Mode.....raw counts, #/ft^3, #/m^3, #/l in cumulative or differential mode
Data Storage.....10,000 records (rotating buffer)
Delay Time .....0 hours to 24 hours
Sample Inlet.....Isokinetic Probe
Security .....Administrator password controlled (optional)
Communication Modes .....USB or Ethernet
Display .....QVGA color with backlight
Alarms .....User defined for each particle size
Dimensions.....(27.2 x 9.9 x 5.3) cm (10.7 x 3.9 x 2.1) inches
Weight .....680.39 g (1.5 lb)

Environmental

IP Rating..... 40
Operating Humidity..... <95 % RH non-condensing
Protection Class ..... IEC 61010-1: Pollution Degree 2
Operating Temperature..... 10 °C to 40 °C (50 °F to 104 °F)
Operating Altitude..... 2000m (6561ft)
Storage Humidity..... up to 98 % RH non-condensing
Storage Temperature..... -10 °C to 50 °C (14 °F to 122 °F)
Power..... AC Adapter, 100 to 240 Vac, 12 Vdc, 2.5 A
Battery Type..... LI-Ion 7.4 V, 2600 mAh
Charge time ..... 3.5 hours
Battery Duration..... 5 hours continuous sampling. 10 hours with typical use model.

Electromagnetic Compatibility

International	*IEC 61326-1: Basic Electromagnetic Environment; CISPR 11: Group 1, Class A Group 1: Equipment has intentionally generated and/or uses conductively-coupled radio frequency energy that is necessary for the internal function of the equipment itself. Class A: Equipment is suitable for use in all establishments other than domestic and those directly connected to a low-voltage power supply network that supplies buildings used for domestic purposes. There may be potential difficulties in ensuring electromagnetic compatibility in other environments due to conducted and radiated disturbances. Caution: This equipment is not intended for use in residential environments and may not provide adequate protection to radio reception in such environments. Emissions that exceed the levels required by CISPR 11 can occur when the equipment is connected to a test object. The equipment may not meet the immunity requirements of this standard when test leads and/or test probes are connected.*
Korea (KCC)	*Class A Equipment (Industrial Broadcasting & Communication Equipment) Class A: Equipment meets requirements for industrial electromagnetic wave equipment and the seller or user should take notice of it. This equipment is intended for use in business environments and not to be used in homes.*
USA (FCC)	*47 CFR 15 subpart B. This product is considered an exempt device per clause 15.103.*