Quick
Reference
Guide

FLUKE®

Laser Detectors

LDR, LDG

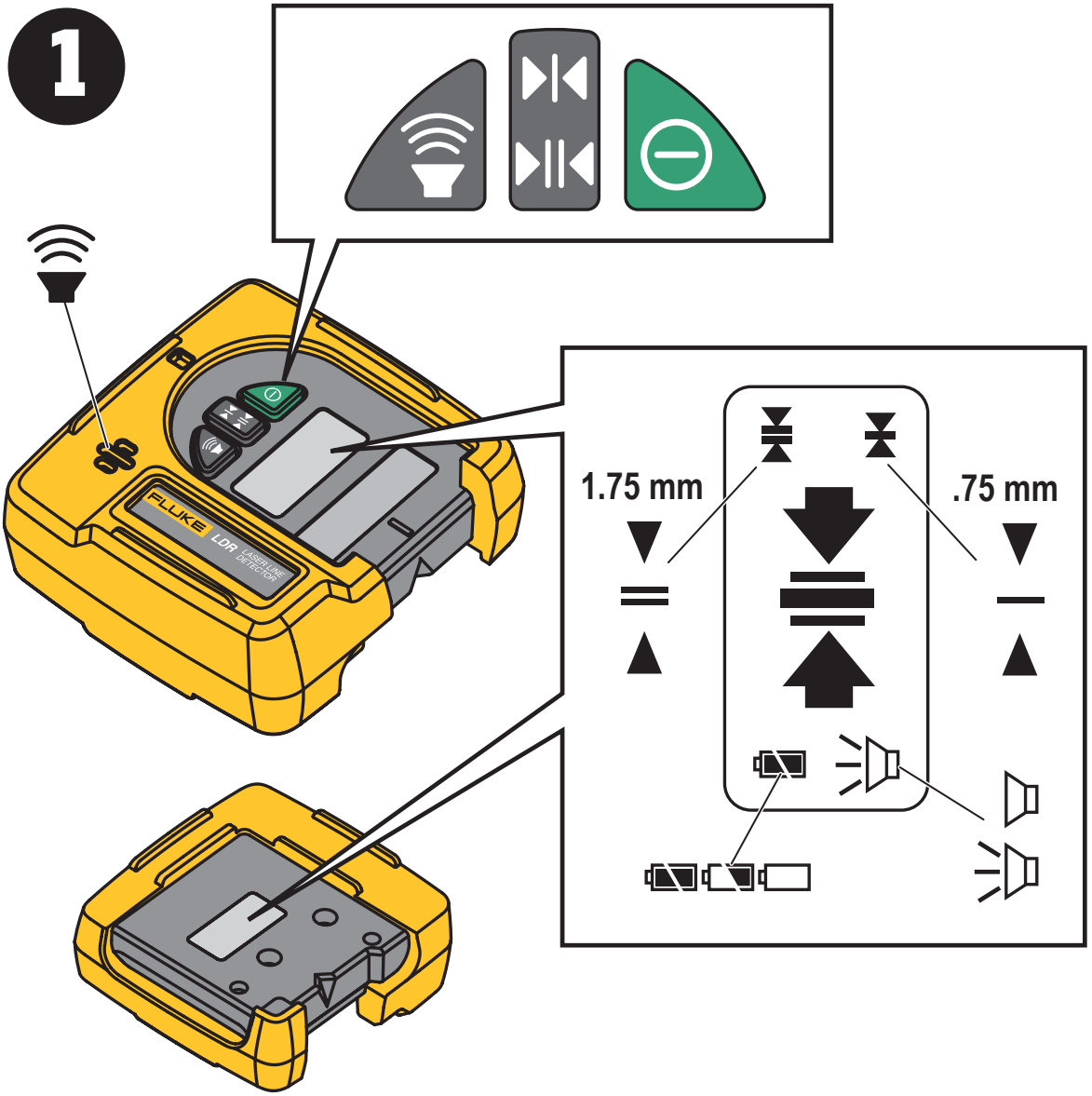

PN 4780279 August 2016
© 2016 Fluke Corporation. All rights reserved.

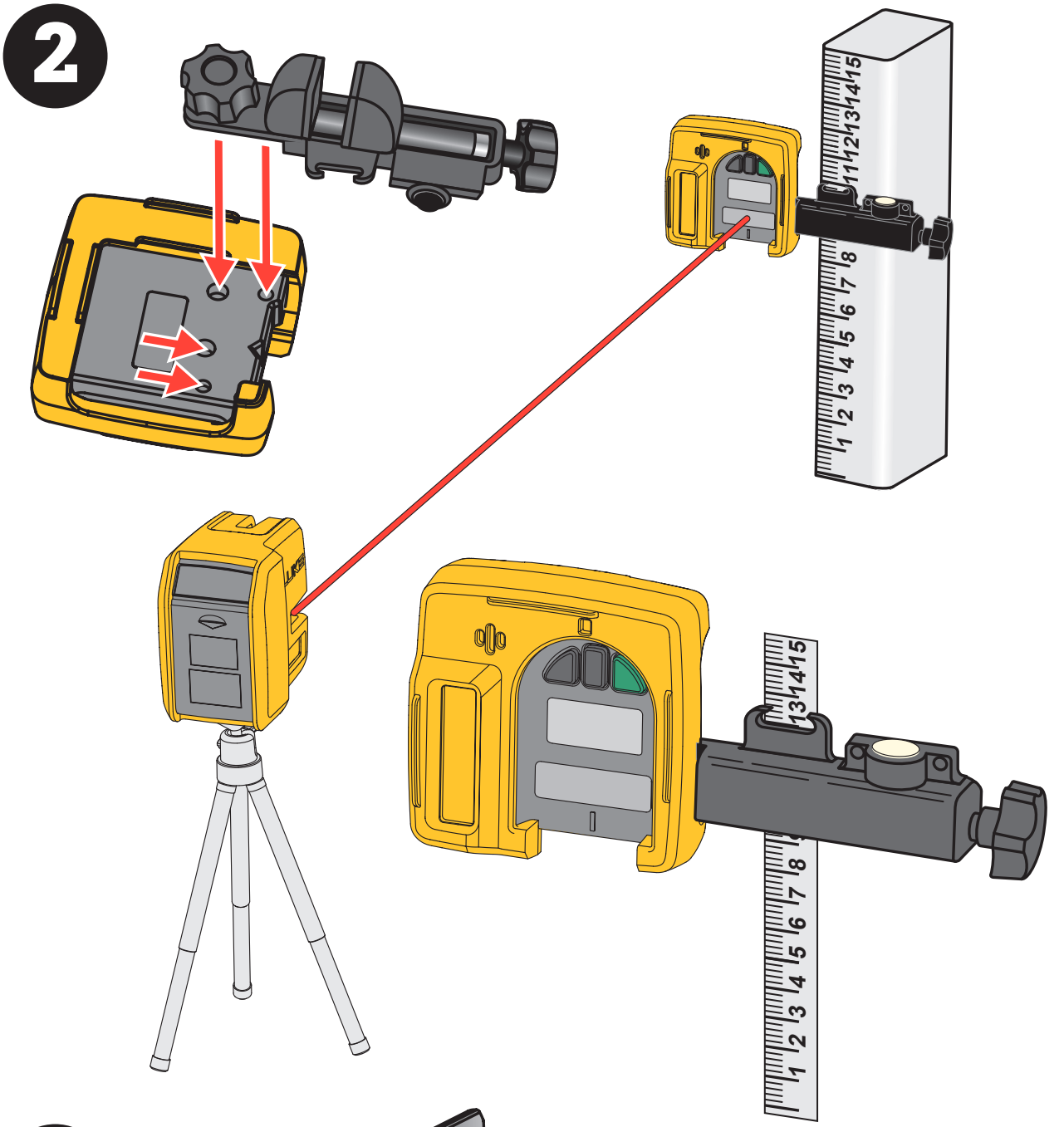
2
1 2 3 4 5 6 7 8 9 10 11 12 13 14 15
1 2 3 4 5 6 7 8 9 10 11 12 13 14 15

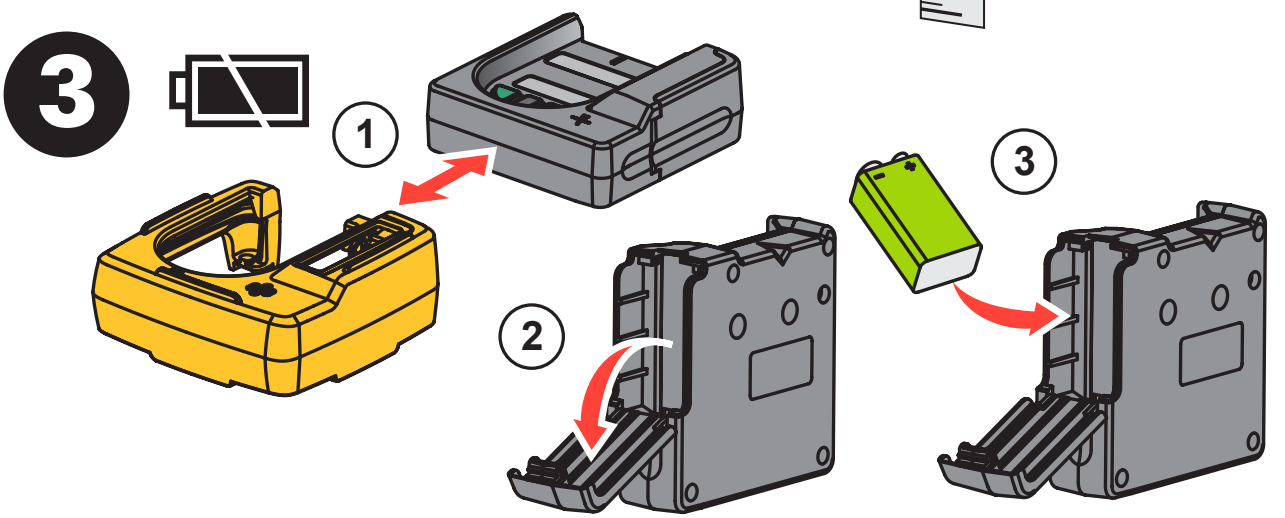
3
1
2
3