FLUKE®

LDR, LDG
Laser Detectors

Users Manual

August 2016

© 2016 Fluke Corporation. All rights reserved. Specifications are subject to change without notice.
All product names are trademarks of their respective companies.

LIMITED WARRANTY AND LIMITATION OF LIABILITY

Each Fluke product is warranted to be free from defects in material and workmanship under normal use and service. The warranty period is three years and begins on the date of shipment. Parts, product repairs, and services are warranted for 90 days. This warranty extends only to the original buyer or end-user customer of a Fluke authorized reseller, and does not apply to fuses, disposable batteries, or to any product which, in Fluke's opinion, has been misused, altered, neglected, contaminated, or damaged by accident or abnormal conditions of operation or handling. Fluke warrants that software will operate substantially in accordance with its functional specifications for 90 days and that it has been properly recorded on non-defective media. Fluke does not warrant that software will be error free or operate without interruption.

Fluke authorized resellers shall extend this warranty on new and unused products to end-user customers only but have no authority to extend a greater or different warranty on behalf of Fluke. Warranty support is available only if product is purchased through a Fluke authorized sales outlet or Buyer has paid theE applicable international price. Fluke reserves the right to invoice Buyer for importation costs of repair/replacement parts when product purchased in one country is submitted for repair in another country.

Fluke's warranty obligation is limited, at Fluke's option, to refund of the purchase price, free of charge repair, or replacement of a defective product which is returned to a Fluke authorized service center within the warranty period.

To obtain warranty service, contact your nearest Fluke authorized service center to obtain return authorization information, then send the product to that service center, with a description of the difficulty, postage and insurance prepaid (FOB Destination). Fluke assumes no risk for damage in transit. Following warranty repair, the product will be returned to Buyer, transportation prepaid (FOB Destination). If Fluke determines that failure was caused by neglect, misuse, contamination, alteration, accident, or abnormal condition of operation or handling, including overvoltage failures caused by use outside the product’s specified rating, or normal wear and tear of mechanical components, Fluke will provide an estimate of repair costs and obtain authorization before commencing the work. Following repair, the product will be returned to the Buyer transportation prepaid and the Buyer will be billed for the repair and return transportation charges (FOB Shipping Point).

THIS WARRANTY IS BUYER'S SOLE AND EXCLUSIVE REMEDY AND IS IN LIEU OF ALL OTHER WARRANTIES, EXPRESS OR IMPLIED, INCLUDING BUT NOT LIMITED TO ANY IMPLIED WARRANTY OF MERCHANTABILITY OR FITNESS FOR A PARTICULAR PURPOSE. FLUKE SHALL NOT BE LIABLE FOR ANY SPECIAL, INDIRECT, INCIDENTAL OR CONSEQUENTIAL DAMAGES OR LOSSES, INCLUDING LOSS OF DATA, ARISING FROM ANY CAUSE OR THEORY.

Since some countries or states do not allow limitation of the term of an implied warranty, or exclusion or limitation of incidental or consequential damages, the limitations and exclusions of this warranty may not apply to every buyer. If any provision of this Warranty is held invalid or unenforceable by a court or other decision-maker of competent jurisdiction, such holding will not affect the validity or enforceability of any other provision.

Fluke Corporation
P.O. Box 9090
Everett, WA 98206-9090
U.S.A.

Fluke Europe B.V.
P.O. Box 1186
5602 BD Eindhoven
The Netherlands

11/99

Table of Contents

Title	Page
Introduction	1
How to Contact Fluke	1
Safety Information	1
Product Familiarization	3
Use the Detector	6
Maintenance	7
Clean the Product	7
Batteries	8
Specifications	8

Introduction

The LDR and LDG Laser Level Detectors (the Detector or Product) are battery-powered instruments that sense lasers difficult to see with the human eye. Use the Product with the 180LR or 180LG (the Laser Level) to identify new level and grade marks. The LDR senses a red laser. The LDG senses a green laser.

How to Contact Fluke

To contact Fluke, call one of the following telephone numbers:

- Technical Support USA: 1-800-44-FLUKE (1-800-443-5853)
- Calibration/Repair USA: 1-888-99-FLUKE (1-888-993-5853)
- Canada: 1-800-36-FLUKE (1-800-363-5853)
- Europe: +31 402-675-200
- Japan: +81-3-6714-3114
- Singapore: +65-6799-5566
- Anywhere in the world: +1-425-446-5500

Or, visit Fluke's website at www.fluke.com.

To register your product, visit http://register.fluke.com.

To view, print, or download the latest manual supplement, visit http://us.fluke.com/usen/support/manuals.

Safety Information

A **Warning** identifies conditions and actions that pose hazards to the user; a **Caution** identifies conditions and actions that may damage the Product or the equipment under test.

⚠ Warning

For safe operation and maintenance of the Product and to prevent personal injury:

- **Read all safety information before you use the Product.**
- **Carefully read all instructions.**

- **Use the Product only as specified, or the protection supplied by the Product can be compromised.**
- **Do not use the Product if it operates incorrectly.**
- **Remove the batteries if the Product is not used for an extended period of time, or if stored in temperatures above 50 °C. If the batteries are not removed, battery leakage can damage the Product.**

Table 1 is a list of the symbols used on the Product or in this manual.

Table 1. Symbols

Symbol	Description	Symbol	Description
	WARNING. RISK OF DANGER.		Certified by CSA Group to North American safety standards.
	Consult user documentation.		Conforms to European Union directives.
	WARNING. LASER RADIATION. Risk of eye damage.		Conforms to relevant Australian Safety and EMC standards.
	Battery or battery compartment.		Conforms to relevant South Korean EMC Standards.
	This product complies with the WEEE Directive marking requirements. The affixed label indicates that you must not discard this electrical/electronic product in domestic household waste. Product Category: With reference to the equipment types in the WEEE Directive Annex I, this product is classed as category 9 "Monitoring and Control Instrumentation" product. Do not dispose of this product as unsorted municipal waste.		
	Indicates a Class 3R laser. AVOID DIRECT EYE EXPOSURE The following text may appear with the symbol on the product label: “IEC/EN 60825-1. Complies with 21 CFR 1040.10 and 1040.11 except for deviations pursuant to Laser Notice 50, dated June 24, 2007.” In addition, the following pattern on the label will indicate wavelength and optical power: λ = xxxnm, x.xxmW.		

Product Familiarization

Figure 1 and Table 2 show the features of the Product.

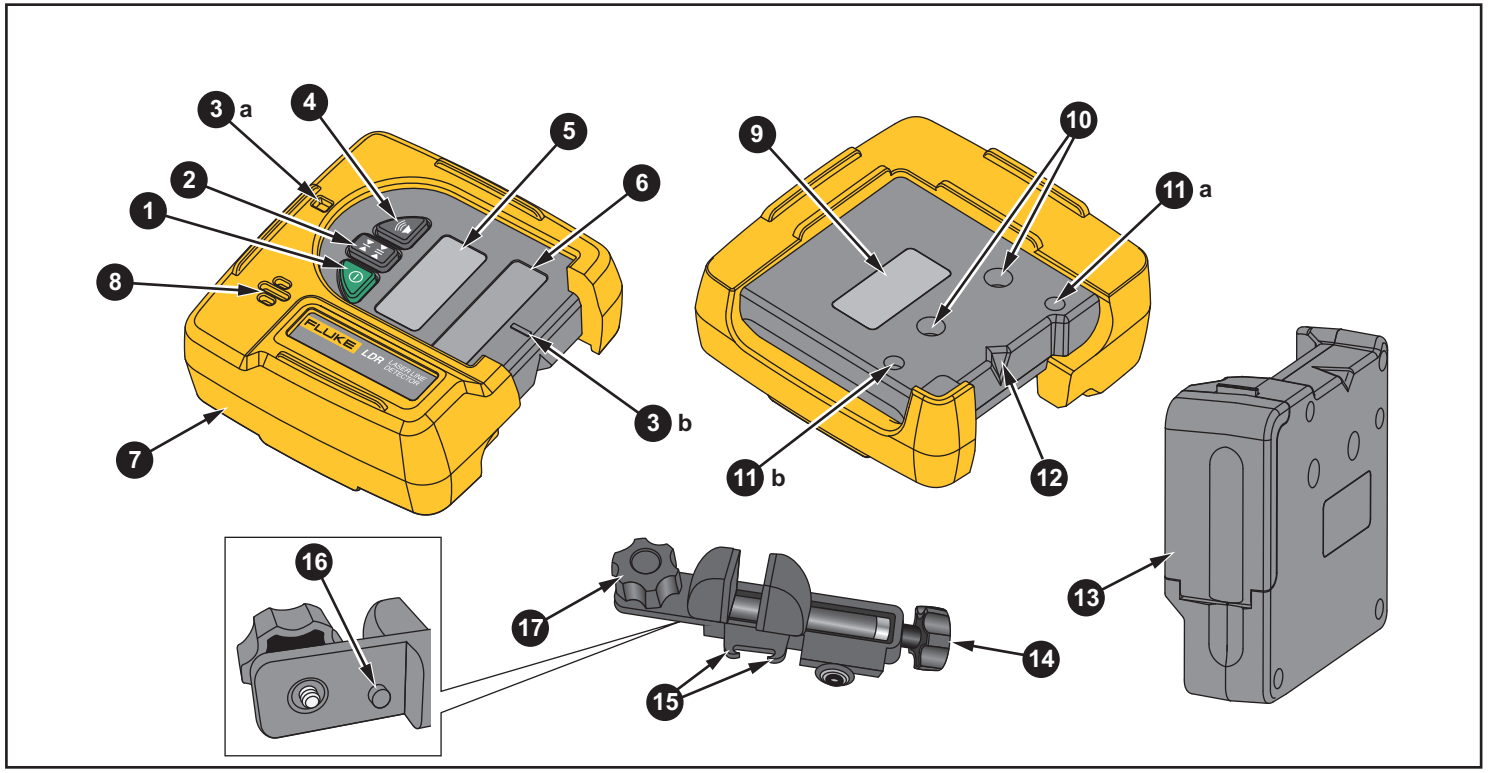

Figure 1. Product Features

Table 2. Product Features

Item	Description
❶	Power button Push to toggle on and off.
❷	Detection accuracy button Push to set detection accuracy level.
❸	On-Grade marks Align with the laser on-grade reading and vertical mark notch.
❹	Beeper button Push to toggle the beeper on and off.
❺	Front LCD See Table 3.
❻	Laser reception window Face towards laser to detect beam.
❼	Holster

Table 2. Product Features (cont.)

Item	Description
❽	Beeper output signal Fast - Detector is too low. Solid - Detector is on-grade. Slow - Detector is too high..
❾	Rear LCD Functions the same as Front LCD. See Table 3.
❿	Rod clamp screw threads Accepts the rod clamp screw to attach the clamp to the Product.
⓫	Clamp guides Use to align clamp.
⓬	Offset notch Use to transfer reference marks 53.18 mm from the edge of the detector.

Table 2. Product Features (cont.)

Item	Description
13	Battery door
14	Rod clamp screw Attaches the clamp to the Detector.
15	Alignment point Secures and aligns the rod clamp to the detector in either a horizontal or a vertical position.
16	Reference indicator Align with the on-grade marks on the Detector for grade rod readings.
17	Clamp screw knob Secures clamp to measuring rod or staff.

Table 3 shows the indicators on the LCD.

Table 3. LCD Indicators

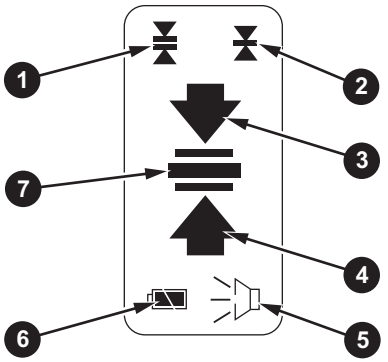

Item	Description
1	Medium detection accuracy (1.75 mm)
2	Fine detection accuracy (0.75 mm)
3	Detector is too high.
4	Detector is too low.
5	Beeper on/off status
6	Battery level status
7	Laser position

Figure 2 shows how to attach the rod clamp to the Product.

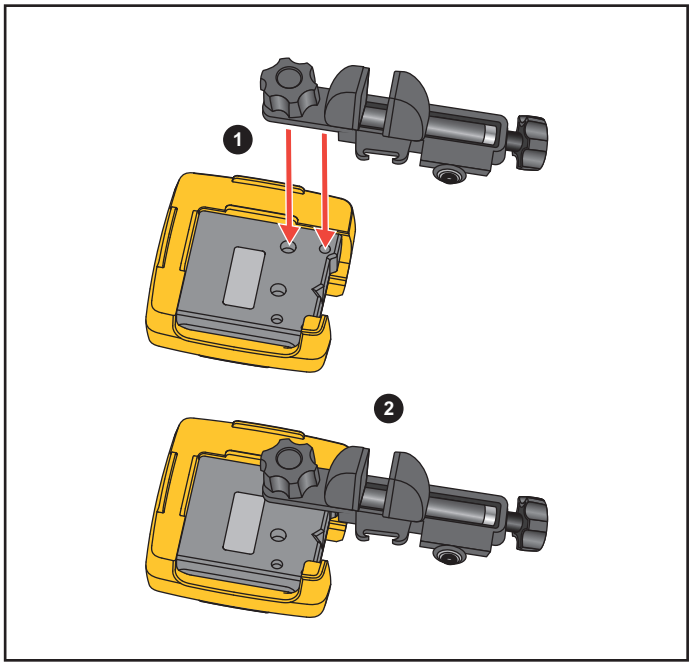

Figure 2. Rod Clamp Attachment

Use the Detector

Use the Detector and the Laser Level to identify new level and grade marks.

To identify new level and grade marks:

1. Put the bottom of the Laser Level on a stable surface or tripod.
2. Connect the Detector to a measuring rod or staff.
3. Turn on the Laser Level and the Detector and direct the laser toward the laser reception window of the Detector. See Figure 3.
4. Move the Detector up and down the rod until the laser level on the LCD indicates the Detector is level with the laser. If the beeper is on, the Detector also emits a solid output signal when the Detector is level with the laser.
5. Secure the Detector to the rod and take measurements as needed.

Note

When the Laser Level is mounted on a tripod, make sure the tripod head is perfectly level. Errors in marks can result if a tripod is out of level.

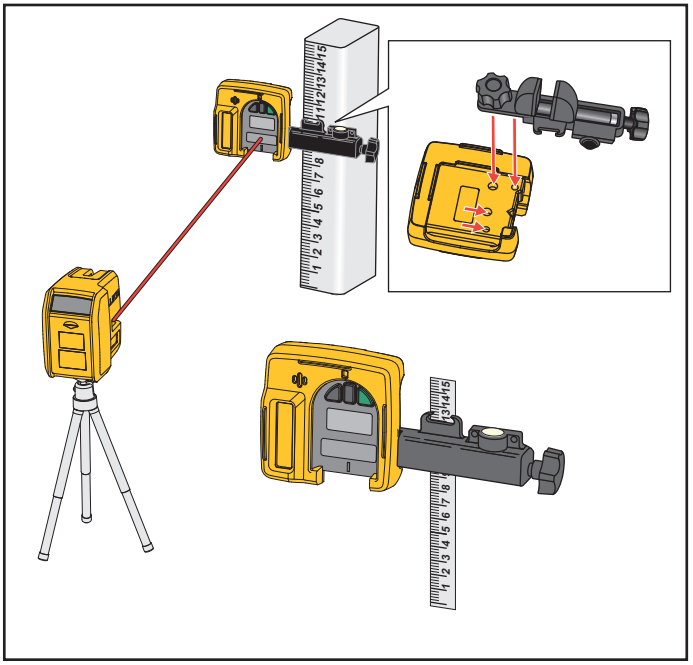

Figure 3. Level and Detector

Maintenance

The Product does not require maintenance but treat Product as a calibrated instrument. Do not drop the Product.

Clean the Product

Clean the case with a damp cloth and a weak soap solution. Do not use abrasives, isopropyl alcohol, or solvents to clean the case or laser reception window.

Batteries

Replace the batteries when the battery indicator shows a low battery.

To install or replace the batteries (See Figure 4.):

1. Remove the Product from the holster.
2. Open the battery compartment.
3. Install one 9 V batter with the correct polarity.
4. Close the battery compartment.
5. Put the Product back into the holster.

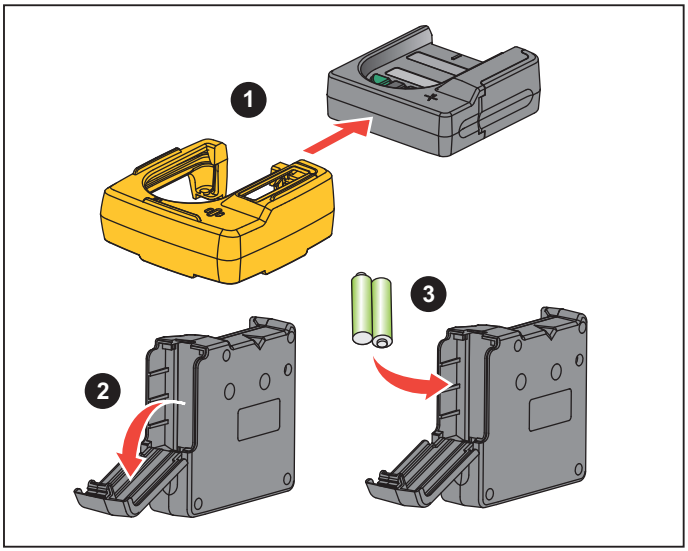

Figure 4. Battery Replacement

Specifications

Working Range.....≥6 m to ≤60 m

Accuracy

Fine.....0.75 mm

Medium.....1.75 mm

Power

Batteries.....1 x 9 V Alkaline IEC LR61

Battery Life.....≥30 hrs, continuous use

Dimensions (H x W x L).....94 mm x 94 mm x 42 mm

Weight.....0.20 kg

Temperature

Operating.....-18 °C to +50 °C

Storage.....-40 °C to +70 °C
with battery: -20 °C to +50 °C

Relative Humidity.....0 % to 90 % (0 °C to 35 °C)
0 % to 75 % (35 °C to 40 °C)
0 % to 45 % (40 °C to 50 °C)

Altitude

Operating.....2000 m

Storage.....12 000 m

Safety.....IEC 61010-1: Pollution Degree 2

Electromagnetic Compatibility (EMC)

International ..... IEC 61326-1: Industrial Electromagnetic Environment

CISPR 11: Group 1, Class A

Group 1: Equipment has intentionally generated and/or uses conductively-coupled radio frequency energy that is necessary for the internal function of the equipment itself.

Class A: Equipment is suitable for use in all establishments other than domestic and those directly connected to a low-voltage power supply network that supplies buildings used for domestic purposes. There may be potential difficulties in ensuring electromagnetic compatibility in other environments due to conducted and radiated disturbances.

Korea (KCC)..... Class A Equipment (Industrial Broadcasting & Communication Equipment)

Class A: Equipment meets requirements for industrial electromagnetic wave equipment and the seller or user should take notice of it. This equipment is intended for use in business environments and not to be used in homes.

USA (FCC)..... 47 CFR 15 subpart B. This product is considered an exempt device per clause 15.103.