FTS Adaptor Kit for molbloc-S™

P/N 401932

INSTALLATION AND OPERATION INSTRUCTIONS

FLUKE® Calibration

This document describes the hardware setup and other recommendations for testing the orifice flow meters used for verification/calibration of flows into PM2.5 particulate monitoring instruments. The Chinook Engineering Streamline flow transfer standard (FTS) is used by leaving the inlet to the orifice open to atmosphere and drawing the air flow through the device utilizing a downstream vacuum source (sub-atmospheric pressure).

HARDWARE REQUIRED

- molbloc-S elements: Designated 2E2-S and 5E1-S
- End flange conversion kit, 1/4 in. VCR, P/N 401935 (allows the placement of 2E2-S molbloc-S on 1/4 in. molstic-S)
- molstic-S Platform: Dual, 1/4 in. with low flow metering valve, P/N FAM0009-01-3, with option -04-2
- Vacuum source and interconnecting hardware

INSTALLATION OF FTS ONTO MOLSTIC-S

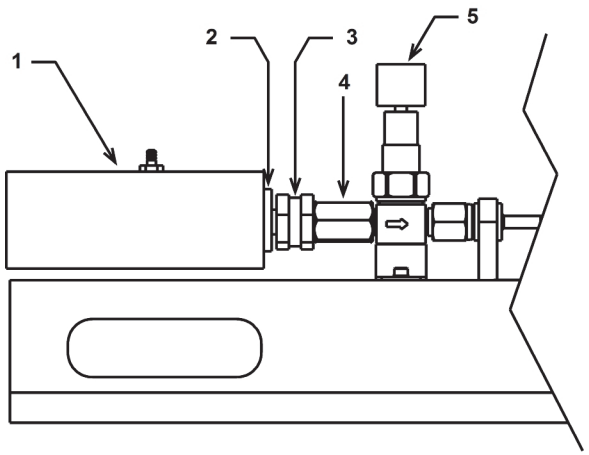

1. Chinook FTS
2. FTS adaptor
3. Filter
4. Double female VCR coupler
5. Metering valve

❶ Remove and retain the VCR tube adaptor together with the double female VCR coupler from the filter element's inlet connection, located on the inlet of the molstic-S. Discard the VCR gasket, which is for one-time use.

❷ Place the included VCR soft o-ring into the groove inside of the FTS adaptor.

❸ Connect the FTS adaptor to the filter element's inlet connection. Refer to the VCR face seal usage instructions in the molbloc-S instruction sheet, document no. 560050, supplied with molbloc-S.

❹ Carefully slide the Chinook Engineering FTS over the adaptor until the adaptor "bottoms out" inside the FTS.

PARTS INCLUDED IN FTS ADAPTOR KIT SHIPMENT

The following parts are included in the FTS adaptor kit shipment:

P/N 401932
FTS Adaptor Kit

DESCRIPTION	QTY	PART NO.
Adaptor, FTS to 4VCR	1	123659
1/4 in. VCR Face Seal O-ring	1	101421

APPLICATION NOTES

When operating the 200 sccm/kPaa molbloc-S in sub-atmospheric conditions, its full-scale flow rate is 20 slm (STP: 0 °C and 101.325 kPaa) at 101.325 kPaa. In order to adjust flow through the FTS to the volumetric flow rate of 16.67 lpm, the inlet absolute pressure to this molbloc-S will have to be approximately 77 kPaa. At its lowest volumetric flow rate of approximately 4 lpm, the inlet absolute pressure will be 20 kPaa.

The 50 sccm/kPaa molbloc-S has full-scale flow rate of 5 slm (STP: 0 °C and 101.325 kPaa) at 101.325 kPaa, and will flow approximately 3 lpm at 55 kPaa. At its lowest volumetric flow rate of approximately 1 lpm, the inlet absolute pressure will be 20 kPaa.

The regulating valve in the configuration described above is used to restrict the flow rate and thereby reduce the molbloc-S inlet pressure. As long as the vacuum source can maintain the molbloc-S outlet pressure to that of no greater than 0.5x that of the inlet pressure, the FTS can be checked at multiple flow rates down to approximately 2 slm for the 200 sccm/kPaa, and 0.5 slm for the 50 sccm/kPaa

REFERENCE FLOW MEASUREMENT

In order for the molbox or COMPASS for molbox PC software to properly calculate volumetric flow rate, the prevailing conditions of ambient temperature, absolute pressure, and relative humidity of the air flowing into the FTS must be determined and entered. If the FTS has the associated instrumentation capable of measuring these values it should be used for this procedure. Typically, the ambient temperature, barometric pressure, and relative humidity of the

PN 3152635
April 2014
© 2014 Fluke Corporation. All rights reserved. Specifications are subject to change without notice.
All product names are trademarks of their respective companies.

laboratory in which the calibration takes place can be measured independently and used for this purpose.



The gas temperature measurement made by the molbloc-S can be selected for use by either the molbox or by COMPASS in order to calculate the FTS flow rate. However, the molbloc-S pressure measurement should NOT be used in this manner since the upstream absolute pressure at the molbloc-S is not the same pressure as the inlet pressure to the FTS due to the flow control valve in the hardware setup.

DETERMINATION OF CALIBRATION COEFFICIENTS

Once the calibration is complete, the data obtained can be used to recalculate the FTS values of slope (m) and offset (b). A simple spreadsheet can be produced to make the following calculations:

FTS indication:

$$IND = \sqrt{\frac{\Delta P \bullet T_{amb}}{P_{amb}}}$$

FTS flow rate:

$$Q_{FTS} = m \bullet \sqrt{\frac{\Delta P \bullet T_{amb}}{P_{amb}}} + b$$

Where:

ΔP	=	Difference between ambient pressure and FTS pressure tap	[in. H_2O]
T_{amb}	=	Ambient air temperature in Kelvin	[°C + 273.15]
P_{amb}	=	Ambient air pressure in Atm	[mmHg/760]
m	=	Slope coefficient	[marked on FTS label]
b	=	Offset coefficient	[marked on FTS label]

Once sufficient calibration data has been obtained, the "as received" % of reading error can be calculated at each point as follows:

$$\%ERR = \frac{(Q_{FTS} - Q_{REF})}{Q_{REF}} \bullet 100$$

The "slope" function in MS Excel can be used to determine the new "m" slope coefficient. The format of this function would take the form similar to:

=slope(ref Q data range:FTS indication data range)

The "intercept" function in MS Excel can be used to determine the new "b" offset coefficient. The format of this function would take the form similar to:

=intercept(ref Q data range:FTS indication data range)

The predicted "as left" % of reading error can be determined in the same manner using the new coefficients of m and b, and recalculating the FTS indication and volumetric flow rate.