DH Instruments
A Fluke Company

OPG1™

Hydraulic Pressure Generator/Controller

Operation and Maintenance Manual

© 1998-2007 DH Instruments, a Fluke Company



High pressure liquids and gases are potentially hazardous. Energy stored in these liquids and gases can be released unexpectedly and with extreme force. High pressure systems should be assembled and operated only by personnel who have been instructed in proper safety practices.

© 1999-2007 **DH Instruments, a Fluke Company** All rights reserved.

Information in this document is subject to change without notice. No part of this document may be reproduced or transmitted in any form or by any means, electronic or mechanical, for any purpose, without the express written permission of **DH Instruments, a Fluke Company** 4765 East Beautiful Lane Phoenix AZ 85044-5318 USA.

DH Instruments makes sincere efforts to ensure accuracy and quality of its' published materials; however, no warranty, expressed or implied, is provided. **DH Instruments** disclaims any responsibility or liability for any direct or indirect damages resulting from the use of the information in this manual or products described in it. Mention of any product or brand does not constitute an endorsement by **DH Instruments** of that product or brand. This manual was originally composed in English and was subsequently translated into other languages. The fidelity of the translation cannot be guaranteed. In case of conflict between the English version and other language versions, the English version predominates.

DH Instruments, **DH**, **DHI**, OPG1, RPM3, PG7000 and CalTool are trademarks, registered and otherwise, of **DH Instruments, a Fluke Company.**

Swagelok is a registered trademark of the Swagelok Company.
Teflon is a registered trademark of the 3M Corporation.

Document No. 550108c
020930
Printed in the USA

DH Instruments
A Fluke Company

TABLE OF CONTENTS

TABLE OF CONTENTS I

TABLES III

FIGURES III

ABOUT THIS MANUAL IV

1. INTRODUCTION 1

1.1 PRODUCT OVERVIEW 1
1.2 SPECIFICATIONS 1
1.3 INSTRUMENT LAYOUT 2
1.3.1 FRONT PANEL 2
1.3.2 OVERALL DIMENSIONS 3
1.3.3 SYSTEM SCHEMATIC 4

2. INSTALLATION 5

2.1 UNPACKING AND INSPECTION 5
2.1.1 REMOVING FROM PACKAGING 5
2.1.2 INSPECTING CONTENTS 5
2.2 SITE REQUIREMENTS 6
2.3 INITIAL SETUP 7
2.3.1 PREPARING FOR OPERATION 7
2.3.1.1 SET UP THE OPG1 7
2.3.1.2 CONNECT PNEUMATIC POWER (DRIVE AIR) 7
2.3.1.3 MAKE HYDRAULIC PRESSURE INTERCONNECTIONS 11
2.4 POWER UP AND VERIFICATION 13
2.4.1 APPLY PNEUMATIC POWER (DRIVE AIR) 13
2.4.2 ADJUST HYDROPNEUMATIC PUMP DRIVE AIR PRESSURE 13
2.4.3 CHECK PROPER OPERATION OF HYDROPNEUMATIC PUMP AND LEAK CHECK 13
2.4.3.1 STEP ONE: PURGING AIR FROM THE HYDRAULIC PUMP CIRCUIT 13
2.4.3.2 STEP TWO: GENERATING A PRESSURE 14
2.4.3.3 PRIMING THE HYDROPNEUMATIC PUMP BY SYRINGE INJECTION 15
2.4.3.4 INTERNAL PURGE OF HYDROPNEUMATIC PUMP 15
2.4.4 PRECAUTIONS TO TAKE BEFORE GENERATING PRESSURE/SAFETY CONSIDERATIONS 16
2.5 SHORT TERM SHUT-DOWN 17
2.6 LONG TERM STORAGE AND SHIPPING 17

3. GENERAL OPERATION 19

3.1 OPERATING PRINCIPLE 19
3.2 OPERATIONAL FUNCTIONS 21
3.2.1 SETTING INLET PRESSURE, DRIVE SET REGULATOR ADJUSTMENT 21
3.2.2 ROUGH PRESSURE GENERATION/CONTROL, INLET AND OUTLET VALVE OPERATION 22
3.2.3 FINE PRESSURE ADJUSTMENT, PDVV (+) AND (-) VALVE OPERATION 22
3.2.4 CONNECTING A DEVICE UNDER TEST (DUT) 23
3.2.5 PURGING AIR FROM THE DUT/SYSTEM UNDER TEST 24
3.2.6 MEASUREMENT REFERENCE LEVEL WHEN VENTED 24
3.3 TYPICAL OPERATING SEQUENCE FOR A COMPLETE CALIBRATION OR TEST 25

 © 1998-2007 DH Instruments, a Fluke Company

4. MAINTENANCE ADJUSTMENTS AND CALIBRATION 27

4.1 PRODUCT OVERVIEW 27
4.2 FILLING THE TANK 27
4.3 REPLACING OIL AND PURGING CONTAMINATED OIL 28
4.4 CLEANING/REPLACING DRIVE AIR FILTER ELEMENTS 28

5. TROUBLESHOOTING 31

5.1 OVERVIEW 31

6. APPENDIX 33

6.1 OPG1 TERMS, LABELS, AND SYMBOLS (GLOSSARY) 33
6.2 WARRANTY STATEMENT 34

© 1998-2007 DH Instruments, a Fluke Company

TABLES

Table 1. OPG1 Parts List 5
Table 2. Pneumatic Power (Drive Air) Requirements 8
Table 3. OPG1 Troubleshooting Checklist 31
Table 4. **DHI** Authorized Service Providers 34

FIGURES

Figure 1. Front Panel 2
Figure 2. Front and Side Views with Dimensions 3
Figure 3. System Schematic 4
Figure 4. Configuring Pneumatic Power Connections 11
Figure 5. Connecting OPG1 to PG7302 or RPM3 12
Figure 6. Hydropneumatic Pump 16
Figure 7. System Schematic 20
Figure 8. Front Panel 21
Figure 9. PDVV Position Indicator 23
Figure 10. Fluid Head Level When Vented, **INLET Valve** Open 24
Figure 11. Oil Tank 28
Figure 12. Drive Air Filters 29

 © 1998-2007 DH Instruments, a Fluke Company

ABOUT THIS MANUAL

This manual provides the user with the information necessary to operate an OPG1 Hydraulic Pressure Generator/Controller. It also includes a great deal of additional information provided to help you optimize OPG1 use and take full advantage of its many features and functions.



FOR THOSE OF YOU WHO "DON'T READ MANUALS", GO DIRECTLY TO SECTION 2.3 TO SET UP YOUR OPG1. THEN GO TO SECTION 4.3. THIS WILL GET YOU RUNNING QUICKLY WITH MINIMAL RISK OF CAUSING DAMAGE TO YOURSELF OR YOUR OPG1. THEN… WHEN YOU HAVE QUESTIONS OR START TO WONDER ABOUT ALL THE GREAT FEATURES YOU MIGHT BE MISSING, GET INTO THE MANUAL!

Manual Conventions



(CAUTION) is used throughout the manual to identify user warnings and cautions.



(NOTE) is used throughout the manual to identify operating and applications advice and additional explanations.

© 1998-2007 DH Instruments, a Fluke Company

DH Instruments
A Fluke Company

1. INTRODUCTION

1.1 PRODUCT OVERVIEW

The OPG1 Hydraulic Pressure Generator/Controller is a stand alone, pressure generating and controlling component intended to be used as the pressure source and means of pressure adjustment in hydraulic calibration and test systems. It is capable of both generating and precisely adjusting pressure from atmosphere to 200 MPa (30 000 psi).

OPG1 combines the versatility, speed and reliability of direct operator control with the convenience and effort-free operation of automation. It is the standard pressure generating and control component in a **DHI** PG7302 piston gauge system or combined with an RPM3 digital pressure monitor to configure a transfer standard based calibration system.

OPG1 includes an on-board hydropneumatic pump to fill the system under test and generate pressures up to 200 MPa (30 000 psi). Two highly progressive, half-turn needle valves control the inlet of pressure from the pump to increase pressure and outlet back to the reservoir to decrease pressure. Very fine pressure adjustment and generation of small pressure excursions is accomplished using a Pneumatically Driven Variable Volume (PDVV) with push button control. Pneumatic power (drive air) of up to 850 kPa (120 psi) is needed to drive the hydropneumatic pump and PDVV.

1.2 SPECIFICATIONS

Electrical Power Requirements	None
Pneumatic Power Requirements	Clean, dry, compressed air @ 50 slm (1.8 scfm) flow. Maximum pressure needed depends on maximum oil pressure desired: - 70 MPa (10 000 psi): 550 kPa (80 psi) - 140 MPa (20 000 psi): 700 kPa (100 psi) - 200 MPa (30 000 psi): 850 kPa (120 psi)
Operating Temperature Range	10 to 45 °C
Weight	27 kg (60 lb)
Dimensions	30 cm H x 30 cm W x 53.5 cm D (11.75 in. x 11.75 in. x 21.0 in.) (Height: Top of tank which is 8.5 cm (3.3 in.) above the top instrument surface)
Pressure Range	0 to 200 MPa (30 000 psi) *Maximum output pressure depends on pneumatic power supply (see above)*
Operating Medium	Di-2-Ethyl Hexyl Sebacate (same as PG7302 piston gauge) and other non-corrosive oils
Pneumatic Power Connections	1/4 in. NPT F (can be configured into one common connection, for both pump drive and variable volume drive)
Hydraulic Test Connections	(3) DH500 F test connections (one at back of either side and one on top of reservoir)
	DH500 is a gland and collar type fitting for 1/4 in. (6.35 mm) coned and left hand threaded tube. DH500 is equivalent to AE F250C, HIP HF4, etc.
Reservoir Capacity	200 cc (12 in^3)
Pneumatically Actuated Variable Volume (PDVV) Displacement	1 cc (0.06 in^3)
Typical Pressure Generation Time (0 to 200 MPa/30 000 psi) *into air purged 50 cc volume*	Less than 12 seconds

© 1998-2007 DH Instruments, a Fluke Company

1.3 INSTRUMENT LAYOUT

1.3.1 FRONT PANEL

The front panel provides all of the controls and indications needed to set and adjust pressure.

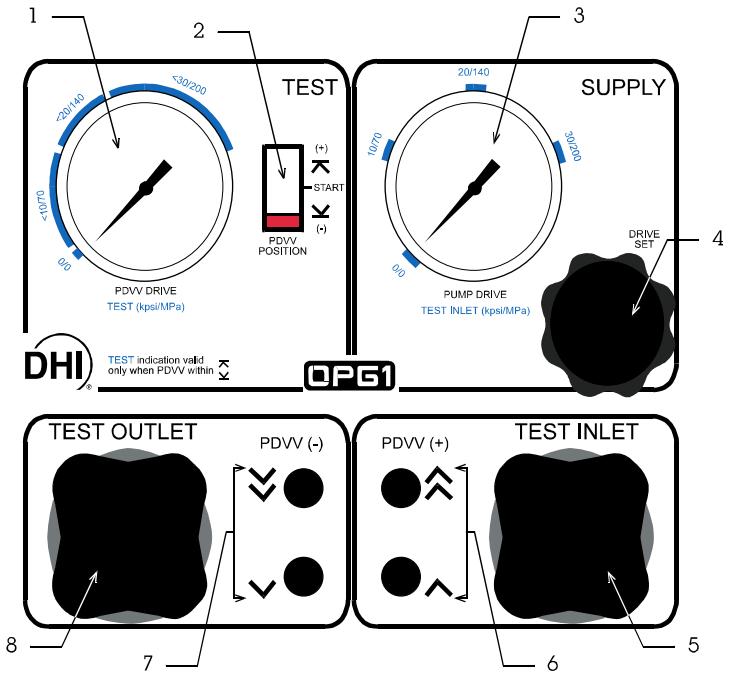

1. PDVV Drive Air/Test Oil Pressure Gauge
2. PDVV Piston Position Indicator
3. Pump Drive Air/Inlet Oil Pressure Gauge
4. Pump Drive Air Set Regulator
5. Test Inlet Valve Knob
6. PDVV Increase Fast and Slow Buttons
7. PDVV Decrease Fast and Slow Buttons
8. Test Outlet Valve Knob

Figure 1. Front Panel

© 1998-2007 DH Instruments, a Fluke Company

1.3.2 OVERALL DIMENSIONS

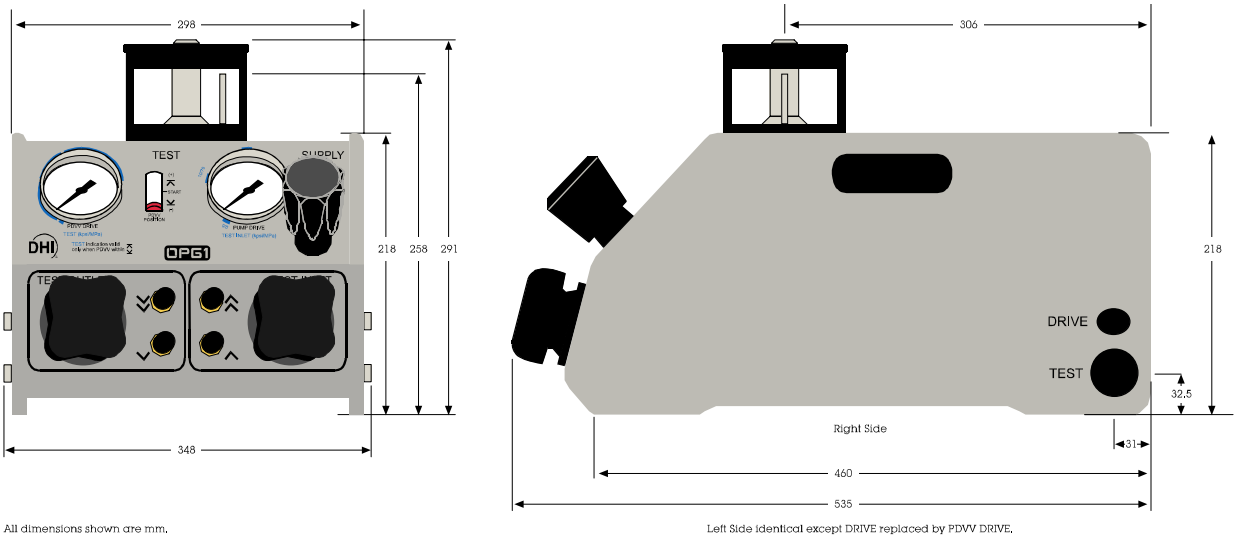

Figure 2. Front and Side Views with Dimensions

© 1998-2007 DH Instruments, a Fluke Company

1.3.3 SYSTEM SCHEMATIC

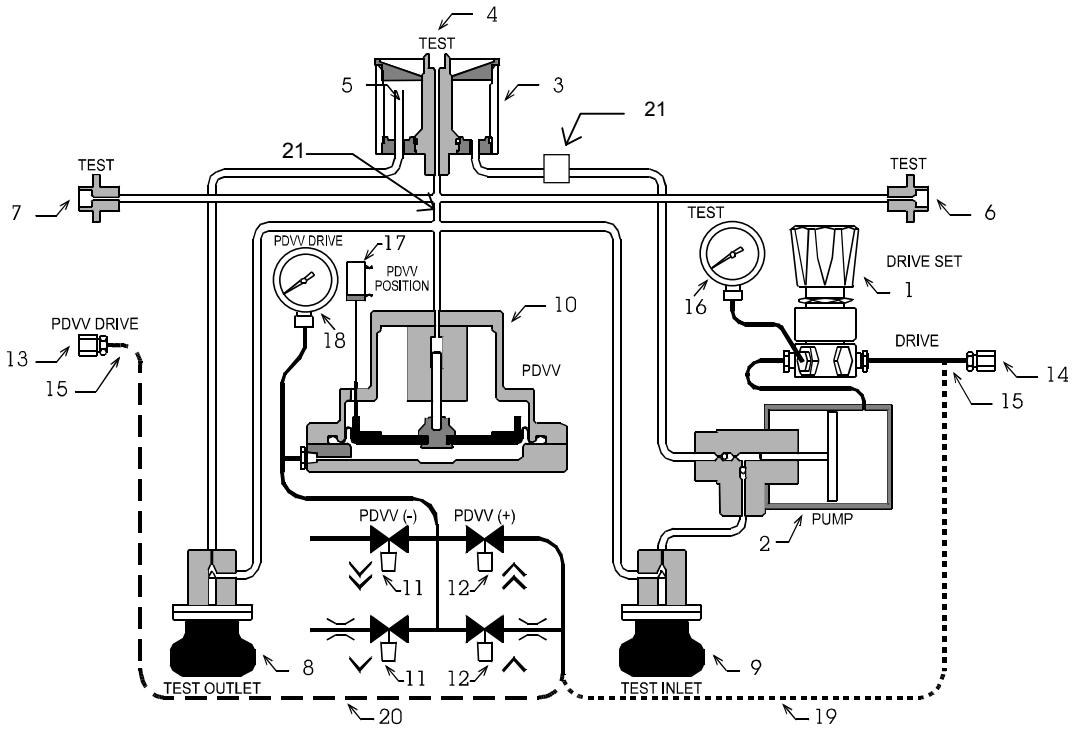

1. Pump Drive Air Set Regulator
2. Hydropneumatic Pump
3. Tank
4. Top TEST Connection
5. Oil Return Overflow Tube
6. Right Side TEST Connection
7. Left Side TEST Connection
8. Test Outlet Valve
9. Test Inlet Valve
10. Pneumatically Drive Variable Volume (PDVV)
11. Fast and Slow PDVV Decrease Valves
12. Fast and Slow PDVV Increase Valves
13. PDVV DRIVE Air Connection (use optional)
14. Common DRIVE Air Connection
15. DRIVE Air Filters
16. PUMP DRIVE Pressure Gauge
17. PDVV Plunger Position Indicator
18. PDVV DRIVE Pressure Gauge
19. DRIVE to PDVV Common Connection (optional - replace PDVV DRIVE to PDVV Independent Connection)
20. PDVV DRIVE to PDVV Independent Connection (as delivered)
21. Oil Filters

Figure 3. System Schematic

© 1998-2007 DH Instruments, a Fluke Company

DH Instruments
A Fluke Company

2. INSTALLATION

2.1 UNPACKING AND INSPECTION

2.1.1 REMOVING FROM PACKAGING

OPG1 is delivered, along with its standard accessories in a corrugated container with corrugated and polyurethane inserts to hold it in place.

Remove the OPG1 and its accessories from the shipping container and remove each element from its protective plastic bag.

2.1.2 INSPECTING CONTENTS

Check that all items are present and have **NO** visible damage. Verify the items received against the parts list in Table 1.

Table 1. OPG1 Parts List

DESCRIPTION	PART #
OPG1 Instrument	401497
ACCESSORIES INCLUDING:	
1 Mat, Top Surface Protection	122998
1 qt. Sebacate (synthetic oil)	400503
1 Syringe, 10 cc	102817
1 O-ring, Brown Viton, 2-104	102758
1 Operation and Maintenance Manual	550108
1 General Accessories Disk (white CD)	102987
INTERCONNECTIONS KIT:	401536
2 ea. Nipple, 2.75 in. (70 mm), DH500	100207
1 ea. Nipple, 6 in. (152 mm), DH500	100208
2 ea. Nipple, 12 in. (305 mm), DH500	100209
1 ea. Union, DH500	100295
1 ea. Elbow, DH500	100168
1 ea. Tee, DH500	100291
2 ea. Gland, DH500	100271
3 ea. Plug, DH500	100285
5 ea. Collar, DH500	101201
1 ea. Nipple, 5 in. x 1/8 in. (127 mm x 3 mm), DH500 tips	123019
2 ea. Adaptor, DH500 F x 1/8 in. NPT M	102819
1 ea. Adaptor, DH500 F x 1/4 in. NPT F	102820

© 1998-2007 DH Instruments, a Fluke Company

2.2 SITE REQUIREMENTS

The exact OPG1 system installation is affected by the components other than the OPG1 that make up the system. This generally includes a pressure measuring reference such as a transfer standard or piston gauge.

When selecting and preparing a site to set up the OPG1 system, the following should be considered:

- **Bench Stability:** The OPG1 weighs about 27 kg (60 lb). Consider its weight and that of other components, including possible items to be tested, when selecting a bench.
- **Location of Other Components:** Plan the space required and a convenient layout for the complete system in which OPG1 is the pressure generation/control component. OPG1 has TEST ports on both its right and left rear sides to allow it to be placed to the right or left in the setup. Select interconnecting tubing and fittings rated to handle the maximum pressures that will be generated. OPG1 hydraulic fittings are all DH500 (equivalent to AE F250C, HIP HF4, etc.). The female DH500 fittings are delivered with glands, nuts and plugs installed. Collars are included in the accessory kit.

  If you do not plan to use OPG1's top TEST port, consider where a device or system under test (DUT) will be connected.

  If the OPG1 is to be used with a **DHI** RPM3 or PG7302 reference device, OPG1 accessories include the hardware necessary for setting up in a standard configuration (see Sections 2.1.2 and 2.3.1.3, Connecting to a **DHI** RPM3 or PG7302 Using Standard OPG1 Interconnection Accessories).
- **Pressure Supply:** Plan the pneumatic power to OPG1. This requires an air or nitrogen source: See Section 2.3.1.2. for detailed requirements. The connections are 1/4 in. NPT female.
- **System Interconnections:** Plan the interconnections between OPG1 and other components in the system. Minimizing the volume and maximizing the mass of all interconnecting elements will reduce pressure generation and stabilization time (see Section 2.3.1.3).



ALWAYS use external tubing and fittings rated for pressures equal to or greater than the maximum pressure that OPG1 will be used to generate.

© 1998-2007 DH Instruments, a Fluke Company

2.3 INITIAL SETUP

2.3.1 PREPARING FOR OPERATION



Before setting up the OPG1, see Section 2.2 for general information on site requirements.

To prepare an OPG1 for check out and operation:

- Set up the OPG1 (see Section 2.3.1.1).
- Connect pneumatic power (see Section 2.3.1.2).
- Make the system hydraulic pressure interconnections (see Section 2.3.1.3).

2.3.1.1 SET UP THE OPG1

To set up the OPG1 proceed as follows:

❶ Place the OPG1 platform on the site table in the proper orientation with the front panel controls conveniently accessible.

❷ Fill tank with oil if necessary. Back off the tank cover until a gap for oil passage can be seen between the DUT connection shaft and the cover. Pour in oil to just under the overflow tube (see Section 4.2).

❸ Leave tank cover open to allow oil to drain from the DUT connection and air to escape when venting oil back to tank.

❹ Install the mat delivered with accessories on top front of OPG1 around oil tank.

2.3.1.2 CONNECT PNEUMATIC POWER (DRIVE AIR)

OPG1 requires pneumatic power to drive two different components: the hydropneumatic pump and the pneumatically driven variable volume (PDVV) (see Section 3.1, Figure 7).

The drive air supply to these two components may be common on one connection for both components or two independent connections may be required depending on the maximum oil pressure to be generated and drive air pressure supply available (see Section 3.1, Figure 7). The requirements for the two different components are summarized in Table 2. To determine whether your application and resources allow a single connection or require two independent connections, see Table 2 to characterize your application and then follow the recommendations in Section 2.3.1.2, One or Two Pneumatic Power Connections?. Finally, follow the instructions in Section 2.3.1.2, Making Two Independent Pneumatic Power Connections for two independent drive air connections and Making a Single Pneumatic Power Connection for a single, common drive air connection.



OPG1 is delivered configured for two independent drive air connections as described in Section 2.3.1.2, Making Two Independent Pneumatic Power Connections. This is the recommended configuration.

© 1998-2007 DH Instruments, a Fluke Company

Table 2. Pneumatic Power (Drive Air) Requirements

INTERNAL COMPONENT	DRIVE AIR PRESSURE NEEDED	MINIMUM FLOW	LUBRICATION REQUIRED	CLEANLINESS CRITICAL
Hydropneumatic Pump	(Hydraulic output pressure/400) + 100 kPa (15 psi)	50 slm (1.8 scfm) **This is fairly high flow.*	No	No
PDVV	70 MPa (10 000 psi): 550 kPa (80 psi) 140 MPa (20 000 psi): 700 kPa (100 psi) 200 MPa (30 000 psi): 850 kPa (120 psi)	200 sccm (< 0.01 scfm) **This is very low flow.*	No	Yes

One or Two Pneumatic Power Connections?

Two pneumatic power connections are needed if:

- The high flow supply available for the hydropneumatic pump is not high enough in pressure to drive the PDVV for the maximum oil pressure range needed.
- The high flow supply available for the hydropneumatic pump is low quality **shop** or **factory** air that cannot be cleaned well enough to be used to supply the PDVV and associated control valves.
- The drive air pressure needed for the PDVV, if accidentally supplied to the hydropneumatic pump, could accidentally cause an overpressure situation that would be hazardous to the system connected to the OPG1.



OPG1 is delivered set up for two independent pneumatic power connections. This is the recommended configuration

Generally, when one drive air supply is used, it is "shop" or "plant" air with relatively high volume flow that is adequate to supply both the hydropneumatic pump and the PDVV.

When two supplies are used, non-lubricated "shop" or "plant" air with relatively high volume flow supplies the hydropneumatic pump and a separate supply of regulated, clean, dry compressed air or nitrogen from a bottle supplies the PDVV.

Making Two Independent Pneumatic Power Connections

The OPG1, as delivered, is configured for two independent pneumatic power connections. Make the connections following PDVV DRIVE Pneumatic Power Connection (Left Side) Requirements and DRIVE Pneumatic Power Connection (Right Side) Requirements below. Both connections are 1/4 in. NPTF. Use Teflon™ tape or an other thread sealant to minimize leakage.

© 1998-2007 DH Instruments, a Fluke Company

PDVV DRIVE Pneumatic Power Connection (Left Side) Requirements

When the PDVV DRIVE port is used to provide an independent pressure supply to the PDVV, since the flow requirements are very low, the supply is usually regulated Nitrogen or instrument grade air from a compressed air bottle.

- Pressure: 550 to 900 kPa (80 to 130 psi), regulated ± 20 kPa (3 psi)
- Must be regulated
- Flow: 200 sccm (< 0.01 scfm)
- NOT lubricated
- Instrument grade N_2 or air or high quality shop air with filter/dryer installed upstream (0 °C dew point, 10 micron filter)



OPG1 must be supplied with NON-LUBRICATED drive air. The internal components are permanently lubricated. The oil in lubricated air can contaminate the small diameter tubing inside OPG1 and lead to erratic behavior requiring difficult and costly cleaning.

DRIVE Pneumatic Power Connection (Right Side) Requirements

- Pressure: 550 to 830 kPa (80 to 120 psi), regulated ± 30 kPa (5 psi)
- Flow: 50 slm (1.8 scfm) minimum
- NOT lubricated
- Shop air with filter/dryer installed upstream (0 °C dew point, 10 micron filter)



The maximum output pressure of the hydropneumatic pump is the drive air pressure x 400.

Making a Single Pneumatic Power Connection

This configuration is optional and requires reconfiguring the OPG1 internal pneumatic connections (see Reconfiguring OPG1 for a Single Pneumatic Power Connection). OPG1 is delivered set up for two independent pneumatic power connections as described in Section 2.3.1.2, Making Two Independent Pneumatic Power Connections.

Once the OPG1 is properly configured for a single pneumatic power connection, connect the pneumatic pressure source to the 1/4 in. NPT F connection labeled **DRIVE** on the right side of the OPG1 housing. Use Teflon™ tape or another thread sealant to minimize leakage.



When using the single DRIVE port to supply drive air to both the hydropneumatic pump and the PDVV, there is no regulator for the PDVV drive pressure in the OPG1. Therefore, the source connected to the DRIVE port must be regulated appropriately to supply the PDVV (see Table 2).

© 1998-2007 DH Instruments, a Fluke Company

Single pneumatic power connection air requirements (see Table 2):

- Pressure: 550 to 900 kPa (80 to 130 psi) regulated ± 20 kPa (3 psi)
- Flow: 50 slm (1.8 scfm) minimum
- NOT lubricated
- Filter/dryer installed upstream



OPG1 must be supplied with NON-LUBRICATED drive air. The internal components are permanently lubricated. The oil in lubricated air can contaminate the small diameter tubing inside OPG1 and lead to erratic behavior requiring difficult and costly cleaning.

Reconfiguring OPG1 for a Single Pneumatic Power Connection

Reconfigure OPG1 pneumatic connections using the following procedure:

❶ Close the OPG1 tank cover fully and plug all hydraulic TEST ports.

❷ Place the OPG1 back down on the bench, so that the front panel is straight up and the open bottom is towards you. Make sure that there is enough oil in the tank so that the pump draw port remains covered. Fill to just under oil return tube (see Section 4.2).

❸ Remove cap (5) from DRIVE port tee (7) and set aside.

❹ Disconnect PFA PDVV supply tube (6) from the PDVV DRIVE port filter connection (4) and reconnect it to the DRIVE port tee (7).

❺ Install cap (5) onto the PDVV Drive port filter connection (4).

❻ Connect recommended pressure to DRIVE port (11) (see Section 2.3.1.2, Making Single Pneumatic Power Connection). Check all new connections for leaks using a liquid leak detector. Correct leaks if present.

© 1998-2007 DH Instruments, a Fluke Company

SINGLE PNEUMATIC POWER CONNECTION
(OPTIONAL CONFIGURATION)

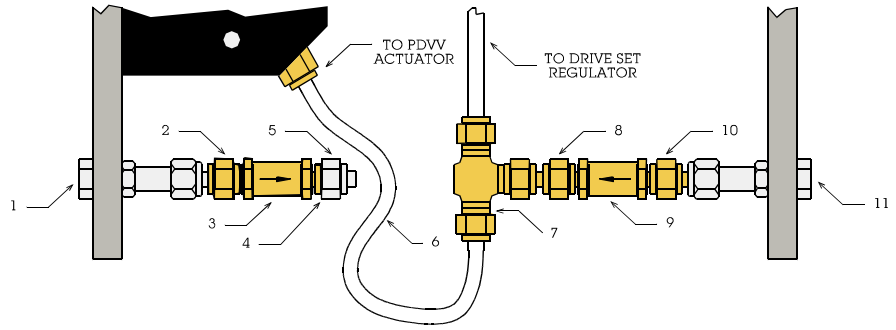

TWO INDEPENDENT PNEUMATIC POWER CONNECTIONS
(AS DELIVERED)

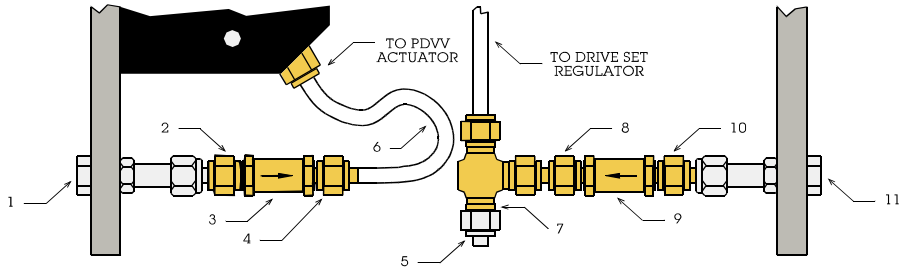

1. PDVV DRIVE Port (use optional)
2. PDVV DRIVE Filter Upstream Connection
3. PDVV DRIVE Filter
4. PDVV DRIVE Filter Downstream Connection
5. Cap
6. PFA PDVV Supply Tube
7. DRIVE Tee PDVV Connection
8. DRIVE Filter Downstream Connection
9. DRIVE Filter
10. DRIVE Filter Upstream Connection
11. DRIVE Port

Figure 4. Configuring Pneumatic Power Connections

2.3.1.3 MAKE HYDRAULIC PRESSURE INTERCONNECTIONS

Connecting to a DHI RPM3 or PG7302 Using Standard OPG1 Interconnection Accessories

OPG1 is delivered with a fittings accessory kit (see Section 2.1.2, Table 1). This kit includes the high pressure hardware necessary to connect OPG1 to a **DHI** RPM3 or PG7302 and operate at pressure up to 200 MPa (30 000 psi). See Figure 5 for the recommended layout and to identify the parts used from the interconnection kit. These setups assume that the TEST port at the top of the OPG1 oil tank or an open leg of the tee will be used to connect the DUT. To adapt to the top test port connection, install one of the DH500 F x 1/8 in. NPT M or DH500 F x 1/4 in. NPT F adaptors onto one of the 2.75 in. DH500 nipples and install the nipple into the DH500 F of the top test port.

© 1998-2007 DH Instruments, a Fluke Company

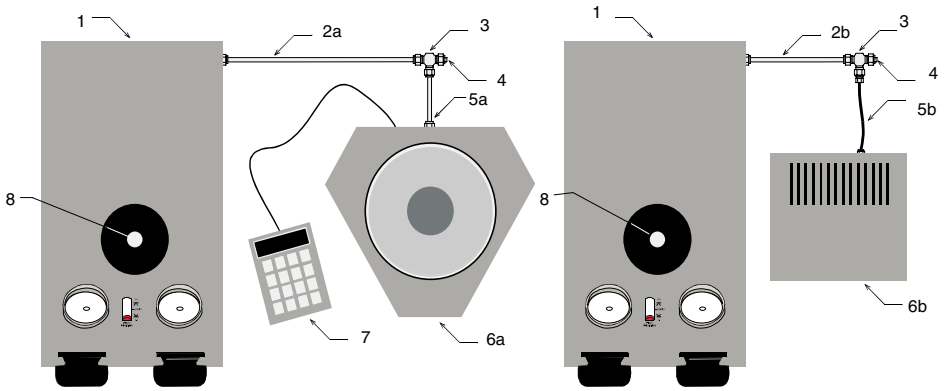

1. OPG1
2a. 12 in. (305 mm) DH500 Nipple
2b. 6 in. (152 mm) DH500 Nipple
3. DH500 Tee
4. DH500 Plug
5a. 2.75 in. (70 mm) DH 500 Nipple
5b. 5 in. (127 mm) DH500 1/8 in. Tube Weld Nipple (slightly flexible)
6a. PG7302
6b. RPM3
7. PG Terminal
8. TEST Port

Figure 5. Connecting OPG1 to PG7302 or RPM3

Other Hydraulic Pressure Interconnections

OPG1 is delivered with a fittings accessory kit (see Section 2.1.2, Table 1). This kit is designed to provide a standard connection to a **DHI** OPG1 or PG7302. It is configured of standard DH500 fittings and tubing and can be adapted for a variety of connections to operate up to 200 MPa (30 000 psi).

The welded 1/8 in. tube can be very useful when a small amount of flexibility is needed to make a connection. Take care not to kink the tube.

The DH500 x 1/4 in. NPT F and DH500 x 1/8 in. NPT M can be used to convert a DH500 tube to standard NPT connections.

Always use external tubing and fittings rated for pressure equal to or greater than the maximum pressure the OPG1 will be used to generate.

When planning system interconnections, consider that the time required to generate and stabilize a pressure is a direct function of the test volume and the mechanical stability of the test tubing and vessels. Always minimize volume to the extent possible and use thick walled, high pressure tubing and vessels.

When planning a DUT or other fitting make and break point external to OPG1, consider that if the point is lower than the OPG1 oil tank, oil will run out of the tank through the open point when OPG1's OUTLET valve is open.

The fluid head reference level of OPG1 when vented (OUTLET valve open), is the top of the tank's oil return overflow tube (see Section 3.2.6).

© 1998-2007 DH Instruments, a Fluke Company

2.4 POWER UP AND VERIFICATION

2.4.1 APPLY PNEUMATIC POWER (DRIVE AIR)

Proceed as follows (numerical references refer to Section 3.2, Figure 8):

❶ Fully back off the **DRIVE SET regulator** (4).

❷ Close the **TEST INLET valve** (5).

❸ Open the **TEST OUTLET valve** (8).

❹ Connect the drive air pressure to the **DRIVE Port** (and **PDVV DRIVE Port**, if used) (see Section 2.3.1.2). The connections are 1/4 in. NPT F.

❺ Adjust the **external** drive air regulator(s) to apply the appropriate level of pressure to the **DRIVE Port** (and **PDVV DRIVE Port**, if used) (see Section 2.3.1.2, Table 2).

2.4.2 ADJUST HYDROPNEUMATIC PUMP DRIVE AIR PRESSURE



This section assumes that the OPG1 system has already been set up, including pressure interconnection (see Section 2.3).



OPG1 hydraulic output pressure is directly proportional to pump DRIVE pressure. When the OPG1 INLET valve is opened, the full pump pressure may be applied to the test system very rapidly. ALWAYS adjust the pump pneumatic drive pressure low enough so that the maximum pump output does not exceed the maximum pressure rating of the devices to which OPG1 is connected.

Turn the **DRIVE SET Regulator** CW and observe the **PUMP DRIVE Gauge** to set the drive air pressure to the desired level (the BLUE indication on outside of gauge gives approximate oil pressure that will be generated).

2.4.3 CHECK PROPER OPERATION OF HYDROPNEUMATIC PUMP AND LEAK CHECK

Checking the proper operation of the hydropneumatic pump and leak checking has two steps. The first step is purging air from the pump hydraulic circuit. The second step is generating high pressures.

2.4.3.1 STEP ONE: PURGING AIR FROM THE HYDRAULIC PUMP CIRCUIT

Proceed as follows (numerical references refer to Section 3.1, Figure 7):

❶ Verify that there is oil in the tank and verify that all test connections are plugged or dead ended.

❷ Open the **OUTLET valve** (8) fully.

❸ Open the **INLET valve** (9) fully.

❹ If drive pressure has been properly connected and set, pump should begin cycling.

© 1998-2007 DH Instruments, a Fluke Company

❺ Observe tank oil return overflow tube (5). Continue allowing pump to cycle until bubble free oil flows regularly from the tube. If no oil appears, or bubbles continue to appear, the internal purging procedure must be used (see Section 2.4.3.3).



If hydropneumatic pump is filled with air (cavitated), closing inlet valve will not stop pump from operating. To stop pump, turn AIR DRIVE regulator (1) fully CCW to stop air flow.

❻ After a successful purge, close the **INLET valve** (8), then the **OUTLET valve** (9) and proceed to STEP TWO (see Section 2.4.3.2) of hydropneumatic pump operation checkout.

2.4.3.2 STEP TWO: GENERATING A PRESSURE



Before applying pressure to the OPG1 and/or the system connected to it, be sure that all pressure vessels and connections are rated for the pressure levels that will be applied and that all connections have been properly tightened (see Section 2.4.4).



OPG1 hydraulic output pressure is directly proportional to pump DRIVE pressure. When the OPG1 INLET valve is opened, the full pump pressure may be applied to the test system very rapidly. ALWAYS adjust pump drive air pressure low enough so that the maximum pump output does not exceed the maximum pressure rating of the devices to which OPG1 is connected (see Sections 2.4.2 and 3.2.1).

Proceed as follows (numerical references refer to Section 3.1, Figure 7):

❶ Verify that there is oil in the tank.

❷ Connect a high pressure indicating device to one of the OPG1 **TEST** ports (4, 6, 7). Plug all other **TEST** ports (4, 6, 7).



There are three TEST ports: One on each lower, rear side and one on the top in the middle of the tank.

❸ Fully close the **OUTLET valve** (8).

❹ Slowly open **INLET valve** (9).

❺ The pump should begin to cycle and the pressure indicated on the high pressure device should increase. If the pump does not cycle, the drive pressure is set too low or the pump is not operating correctly. If the pump cycles but the pressure does not increase:

- the pump is not properly primed (see Section 2.4.3.1);
- there is a leak in the system to which OPG1 is connected or in the OPG1 itself;

© 1998-2007 DH Instruments, a Fluke Company

- air flow to the pump is too low; or
- the pump is not operating properly.

❻ Keep **INLET valve** (9) open until desired oil pressure is set.

❼ Fully close **INLET valve** (9).

❽ **Leak Check:** The pressure indicated by the high pressure device connected to the **TEST port** should stabilize and hold. If it does not, there is a leak in the system to which OPG1 is connected or in OPG1 itself.



The time required for pressure to stabilize after the pressure has been changed is directly proportional to the volume connected to OPG1 and the mechanical stability of the volume's connections and vessels. To reduce stabilization time, go beyond the pressure set point and return.

❾ When leak checking is complete, slowly open the **OUTLET valve** (8) to remove pressure and vent to atmosphere.

2.4.3.3 PRIMING THE HYDROPNEUMATIC PUMP BY SYRINGE INJECTION

The hydropneumatic pump injection priming procedure is only required if the regular purge procedure fails (see Section 2.4.3.1).

Numerical references in this section refer to Section 4.2, Figure 11.

To prime the pump with the syringe proceed as follows:

❶ Back off the OPG1 **DRIVE SET regulator** to zero by turning it fully CCW.

❷ Open **INLET valve** and **OUTLET valve**.

❸ Remove oil tank cover (2).

❹ Install 2-104 O-ring on tip of 10 cc syringe (both supplied in OPG1 accessory kit, see Section 2.1.2).

❺ Fill syringe with oil from the tank.

❻ Insert the tip of the syringe into the tank pump draw port (4) and press so that the O-ring seals against bottom of tank.

❼ Increase pump drive air pressure by rotating **DRIVE SET regulator** CW until the pump begins to cycle. When pump begins to cycle, press syringe plunger, injecting oil into pump. Continue until oil returning through the tank oil return overflow tube (3) is free of air bubbles. Note that in some cases, air free oil will return before trapped gas is expelled from the pump.

2.4.3.4 INTERNAL PURGE OF HYDROPNEUMATIC PUMP

The hydropneumatic pump internal purge procedure is only required if the regular purge procedure fails (see Section 2.4.3.1) and a syringe is not available to perform the injection priming procedure.

 © 1998-2007 DH Instruments, a Fluke Company

To purge the hydropneumatic pump internally, proceed as follows (see Figure 6):

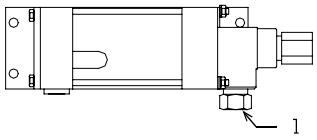

Figure 6. Hydropneumatic Pump

❶ Verify that there is oil in the tank.

❷ Back off **DRIVE SET regulator** to zero.

❸ Position the OPG1 so that you can access the hydraulic output pressure connection (1) of the hydropneumatic pump while keeping the OPG1 in its normal, horizontal operating position. This is accomplished by placing either end on separate tables and accessing the pump from beneath OPG1 or by slightly lifting the front of the OPG1.

❹ Open the **INLET valve** fully.

❺ Use a wrench to turn the hydraulic output pressure connection gland (1) 1/8 turn CCW. This cracks the connection so that output oil from the pump can escape through the safety weep hole.

❻ Slightly adjust **DRIVE SET regulator** CW until the pump starts cycling.

❼ Allow the pump to cycle until clear, bubble free oil flows regularly from the weep hole. If this does not occur, the pump may require service. Contact your **DHI** Authorized Service Provider (see Section 6.2).

❽ Retighten the hydraulic output pressure connection (1) by turning the gland nut approximately 1/8 turn CW.

❾ Go to Section 2.4.3.2 and proceed with the normal purge procedure.

2.4.4 PRECAUTIONS TO TAKE BEFORE GENERATING PRESSURE/SAFETY CONSIDERATIONS

Before using the OPG1 to generate and adjust pressure, consider the following:

- Check that all connections, vessels and DUTs connected to OPG1 are rated for the pressure to be generated and that all fittings are properly tightened.
- Opening the **INLET valve** opens to the output of the hydropneumatic pump. As long as the **INLET valve** is open, the hydropneumatic pump will pump until it stalls. To avoid accidental overpressure of the items to which OPG1 is connected, always adjust the **DRIVE SET regulator** so that the hydropneumatic pump output will be lower than the maximum desired pressure BEFORE opening the **INLET valve** (see Sections 2.4.2 and 4.2.1).



Always adjust the DRIVE SET regulator so that the hydropneumatic pump output is not higher than the maximum desired pressure BEFORE opening the INLET valve. Failure to adjust the DRIVE SET regulator increases the chances of accidental overpressure of the system connected to OPG1.

- The ^ and ^^ push button valves can increase pressure very quickly. Observe pressure evolution carefully when operating these valves (see Section 3.2.3).
- Check oil tank level before operating and regularly during operation. Operating with an empty oil tank will cause the hydropneumatic pump to draw air and require priming it (see Section 2.4.3).

© 1998-2007 DH Instruments, a Fluke Company

- Put the PDVV in the **START** position when starting a calibration or test sequence (see Section 3.2.3).
- Systems and DUTs connected to OPG1 should be purged of air before they are pressurized (see Section 3.2.5).
- If there is an open point in the system to which OPG1 is connected that is lower than the OPG1 tank, oil will run out of the OPG1 tank through this point when the **OUTLET valve** is open. Close the **OUTLET valve** when a point lower than the tank is open.
- The fluid head reference level of OPG1 when the **OUTLET valve** is open is the top of the tank return overflow tube. Consider the difference between this reference level and the reference measuring device reference level to avoid zero gauge points that are inconsistent with other pressure points (see Section 3.2.6).

2.5 SHORT TERM SHUT-DOWN

When leaving OPG1 at rest but still set up for operation:

❶ Fully close the **INLET valve**.

❷ Release hydraulic pressure by fully opening the **OUTLET valve**.

❸ Plug any open point in the hydraulic test system connected to OPG1 that is lower than the OPG1 tank or the oil will run out of the tank through the open point.

❹ Release pump drive pressure by fully backing off the **DRIVE SET regulator**.

2.6 LONG TERM STORAGE AND SHIPPING

To prepare OPG1 for long term storage or shipping:

❶ Release hydraulic pressure by fully opening the **OUTLET valve**.

❷ Release pump drive pressure by fully backing off **DRIVE SET regulator**.

❸ Release pneumatic drive pressure and disconnect the **DRIVE** and **PDVV DRIVE** pressure connection(s). Cap both ports with plastic caps if available.

❹ Close the **OUTLET valve** and **INLET valve**.

❺ Disconnect all hydraulic pressure connections and plug the connections using DH500 plugs held by gland nuts (DH500 plugs were delivered with OPG1). There are three hydraulic connections: one on either side labeled **TEST** and one on top at the center of the tank cover.

❻ Screw the tank cover firmly shut. Oil may be left in the tank.



When shipping OPG1, use the original shipping materials, if possible. When using alternate materials (If the original shipping materials are not available) take care to assure that: a) the front panel controls and indicators are protected; b) the top mounted oil reservoir is not subjected to shock or load; c) the tubing and components exposed through OPG1's open bottom are protected. OPG1 must ride on its four feet - NOT on the internal components.

© 1998-2007 DH Instruments, a Fluke Company

NOTES

DH Instruments
A Fluke Company

3. GENERAL OPERATION

3.1 OPERATING PRINCIPLE

Numerical references in this section refer to Section 3.1, Figure 7.

OPG1 is a self-contained system designed to generate and adjust pressure from atmosphere (zero gauge) to 200 MPa (30 000 psi) into static pressure test and calibration systems. OPG1 combines the capability to fill a system with oil and execute large pressure changes very rapidly with very fine pressure adjustment around a point.

OPG1 uses two different techniques to generate and adjust pressure.

The first means of generating and adjusting pressure is the hydropneumatic pump (2) combined with the oil tank (3), **DRIVE SET regulator** (1), **INLET valve** (9) and **OUTLET valve** (8). **This combination is used for filling the system under test, large pressure changes and rough pressure control.** The valves are Belleville spring loaded, highly progressive, half-turn needle valves. The pump is a pneumatically powered, gate valve controlled, piston pump similar to a double-acting pneumatic cylinder. There is a ratio of 400:1 between the pneumatic piston and hydraulic plunger. The pump will operate continuously until the pneumatic drive pressure on the pneumatic piston is in equilibrium with the oil pressure on the oil plunger. For example, if the pneumatic drive pressure is 500 kPa (75 psi), the pump will cycle until the oil pressure reaches 200 MPa (30 000 psi). The pump draws oil from the oil tank on top of OPG1. The **DRIVE SET regulator** (1) is used to set the pneumatic drive pressure and thus the oil output pressure. The pump oil output is connected to the **INLET valve** (9). Opening the **INLET valve** connects the pump output to the test system causing the pump (2) to cycle, drawing oil from the tank as needed and pressurizing the system. Opening the **OUTLET valve** (8) returns oil to the tank (3), depressurizing the system.

The second means of generating and adjusting pressure is the Pneumatically Driven Variable Volume (PDVV) (10) combined with the **PDVV (+) valves** (12) and **PDVV (-) valves** (11). **This combination is used for smaller pressure changes and fine pressure control.** The PDVV is a pneumatically actuated variable volume. A piston or plunger in a cylinder is exposed to the oil pressure. The other end of the plunger is connected to a dome loaded pneumatic actuator. Changing the pneumatic pressure on the dome loaded actuator causes the plunger to move, increasing or decreasing oil pressure. A spring returns the plunger to its minimum stroke position when there is no pressure on it. A mechanical system tracks movement of the plunger and an indicator (17) displays the plunger position on the front panel. The **PDVV (+) valves** (12) and **PDVV (-) valves** (11) are momentary, poppet valves that open when pressed. The **(+) valves** (12) admit drive air pressure to the PDVV actuator causing the PDVV piston to move forward compressing the oil and increasing the pressure. The **(-) valves** (11) have the opposite effect causing pressure to decrease.

© 1998-2007 DH Instruments, a Fluke Company

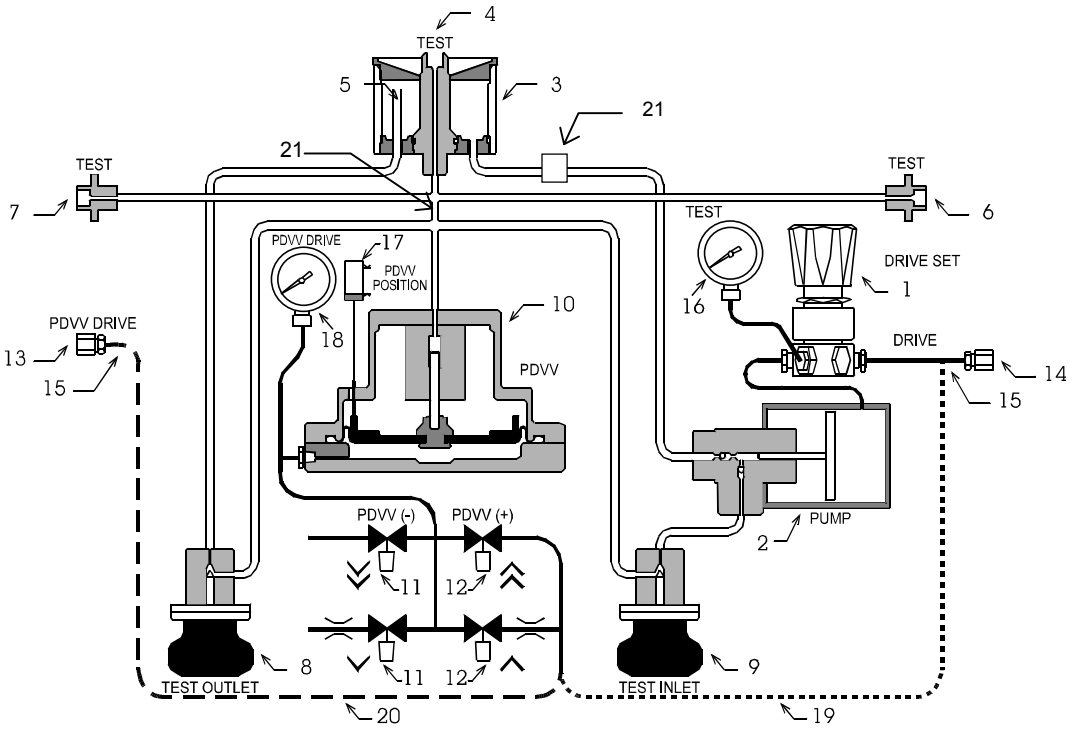

1. Pump Drive Air Set Regulator
2. Hydropneumatic Pump
3. Tank
4. Top TEST Connection
5. Oil Return Overflow Tube
6. Right Side TEST Connection
7. Left Side TEST Connection
8. Test Outlet Valve
9. Test Inlet Valve
10. Pneumatically Drive Variable Volume (PDVV)
11. Fast and Slow PDVV Decrease Valves
12 Fast and Slow PDVV Increase Valves
13. PDVV DRIVE Air Connection
14. Common DRIVE Air Connection
15. DRIVE Air Filters
16. PUMP DRIVE Pressure Gauge
17. PDVV Plunger Position Indicator
18. PDVV DRIVE Pressure Gauge
19. DRIVE to PDVV Common Connection (optional - with PDVV DRIVE to PDVV Independent Connection not used)
20. PDVV DRIVE to PDVV Independent Connection (as delivered)
21. Oil Filters

Figure 7. System Schematic

© 1998-2007 DH Instruments, a Fluke Company

3.2 OPERATIONAL FUNCTIONS

All OPG1 operational functions are accessed from the instrument front panel. Sections 3.2.1 to 3.2.6 detail the various functions.

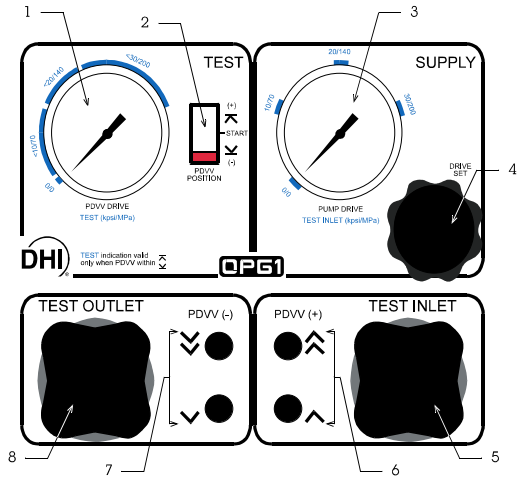

1. PDVV Drive Air/Test Oil Pressure Gauge
2. PDVV Piston Position Indicator
3. Pump Drive Air/Inlet Oil Pressure Gauge
4. Pump Drive Air Set Regulator
5. Test Inlet Valve Knob
6. PDVV Increase Fast and Slow Buttons
7. PDVV Decrease Fast and Slow Buttons
8. Test Outlet Valve Knob

Figure 8. Front Panel

3.2.1 SETTING INLET PRESSURE, DRIVE SET REGULATOR ADJUSTMENT

Numerical references in this section refer to Section 3.2, Figure 8.

The **DRIVE SET regulator** (4) is a self venting regulator that sets the pneumatic drive pressure to the hydropneumatic pump. This determines the oil pressure that the pump will generate before stalling and that is available **on demand** when the **INLET valve** (5) is opened.

The **PUMP DRIVE gauge** (3) indicates the pump drive pressure on its inner dial and the corresponding pump output oil pressure on its outer dial (BLUE numbers). Use the outer BLUE indication to predict the maximum pressure that will be generated when the inlet valve is opened.

With the **INLET valve** (5) closed, use the **DRIVE SET regulator** (4) and the **PUMP DRIVE gauge** (3) indication to set the desired maximum pump output pressure. This is generally done at the beginning of a test or calibration based on the maximum pressure of the calibration. It is good practice to set the pump output pressure below the maximum pressure desired to avoid accidental overpressure. The PDVV can then be used for the final pressure adjustment at the maximum pressure (see Section 3.2.3).



The DRIVE SET regulator sets the oil pressure output of the hydropneumatic pump. When the INLET valve is opened, this pressure can be generated very rapidly in the system connected to OPG1. Use caution in setting the pump drive pressure and always check the setting and adjust if necessary before using the INLET valve (see Sections 2.4.2 and 3.2.1).

© 1998-2007 DH Instruments, a Fluke Company

3.2.2 ROUGH PRESSURE GENERATION/CONTROL, INLET AND OUTLET VALVE OPERATION

Numerical references in this section refer to Section 3.2, Figure 8.

The **INLET valve** (5) and **OUTLET valve** (8) are high pressure needle valves. Their operation is highly progressive over a half-turn with mechanical stops at each end so they cannot be overtightened. The valve is turned CW to close and CCW to open. A WHITE dot on the handle body indicates its current open/close position.

The **INLET valve** (5) controls the flow of oil from the hydropneumatic pump into the test system. When it is closed, the pump is shut off from the test system and dead ended. When the **INLET valve** is open, the pump output is connected to the test system and can fill and generate pressure into the system.

The **OUTLET valve** (8) controls the flow of oil from the test system back to the tank. When it is closed, the test system is shut off from the tank. When the **OUTLET valve** is open, the system returns oil to the tank and is opened to atmospheric pressure.

The **INLET valve** (5) and **OUTLET valve** (8) are used to execute large pressure changes in the test system and for rough pressure control. The **INLET valve** is used to connect to the pump to purge and prime the test system at the beginning of a test or calibration. The **OUTLET valve**, when fully opened, is the means of opening the test to atmosphere and **setting zero** pressure. The **INLET valve** and **OUTLET valve** are not generally used for ON/OFF action but progressively to roughly set the desired pressure. Exercise caution when operating the valves to not open them too quickly which could cause pressure in the system to change much more rapidly than desired.



The INLET valve connects the output of the hydropneumatic pump to the test system. When the INLET valve is opened, high pressure can be generated very rapidly in the system connected to OPG1. Use caution in opening the INLET valve and always check the PUMP DRIVE gauge before doing so (see Sections 2.4.1 and 3.2.1).

3.2.3 FINE PRESSURE ADJUSTMENT, PDVV (+) AND (-) VALVE OPERATION

Numerical references in this section refer to Section 3.2, Figure 8 except where specified otherwise.

The **PDVV (+) valves** (6) and **PDVV (-) valves** (7) are push button, poppet valves that control the supply and exhaust of drive air pressure to the PDVV actuator (see Section 3.1). When the push button is pressed, the valve opens. When the push button is released the valve closes.

The valves labeled ⩛ and ⩛ release gas from the PDVV actuator causing the PDVV plunger to back off and pressure to decrease. The valves labeled ⩓ are ⩓ admit gas to the PDVV actuator causing the PDVV plunger to move forward and pressure to increase. The ⩛ and ⩓ valves are for high speed PDVV operation**.** The ⩛ and ⩓ valves are for slow speed PDVV operation.

The **PDVV (+) valves** (6) and **PDVV (-) valves** (7) are to make small pressure changes and for fine pressure control. Brief momentary action on the ⩛ and ⩓ valves is used to **bump** or **jog** pressure in very small amounts around a pressure point.

The actual rate of pressure change caused by the **PDVV (+) valves** and **PDVV (-) valves** is dependent on the test volume that is connected to OPG1. Increasing the test volume lowers the rates and pressure step size. The maximum pressure that can be generated by the **PDVV (+) valves** is dependent on the drive air supply (see Section 2.3.1.2, Table 2).

© 1998-2007 DH Instruments, a Fluke Company

The position of the PDVV plunger is indicated by the **PDVV POSITION indicator** (2). The RED index (Figure 9, Ref 4) on the indicator tracks the movement of the PDVV plunger. Minimum and maximum end of stroke positions (Figure 9, Refs 3 and 1) as well as a recommended start position (Figure 9, Ref 2) are indicated. The full stroke displacement of the PDVV plunger from maximum to minimum end of stroke is 1 cc (0.06 in.^{3}).

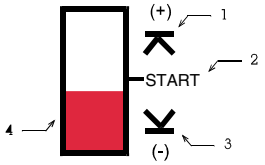

1. PDVV Plunger Maximum End of Stroke
2. PDVV Plunger Recommended Start Position
3. PDVV Plunger Minimum End of Stroke
4. PDVV Plunger Current Position (red/white line)

Figure 9. PDVV Position Indicator

The current air drive pressure on the PDVV actuator and approximate corresponding oil test pressure are indicated by the **PDVV DRIVE gauge** (1). The oil test pressure indication is highly approximate and only valid when the PDVV plunger is NOT at an end of stroke position.

For the **PDVV (+) valves** (6) and **PDVV (-) valves** (7) to have an effect, the PDVV plunger must have stroke available. If the PDVV is at its end of stroke (Figure 9, 1. and 3.), the plunger cannot move to change pressure. The recommended PDVV **START** position (Figure 9, 2.) puts the plunger at the middle of its stroke so 50 % of PDVV displacement is available in either direction. The PDVV plunger can be positioned without affecting oil pressure using the ⩛ and ⩙ valves when the **OUTLET valve** is open (oil pressure vented). The plunger is returned to minimum end of stroke position by a spring. The PDVV plunger is usually set to the desired position at the start of a calibration or test.

If the PDVV plunger reaches end of stroke during a calibration or test, used the **INLET valve** and/or **OUTLET valve** to increase or decrease the pressure, as needed.



The PDVV (+) valves (6), ***generate pressure indefinitely when opened.*** *Use caution when using these valves not to generate more pressure than desired.*

3.2.4 CONNECTING A DEVICE UNDER TEST (DUT)

The device to be tested or calibrated should be connected either to a TEST port configured on the interconnections external to OPG1 or to the OPG1 **TEST** port on the top of the unit at the center of the tank (see Section 3.1, Figure 7). The test connection is a DH500 F (DH500 is a gland and collar type fitting for 1/4 in. (6.35 mm) coned and left hand threaded tube. DH500 is equivalent to AE F250C, HIP HF4, etc.).

The DH500 test connection can be converted to 1/8 in. NPT M or 1/4 in. NPT M using the 2.75 in. (7 mm) tube and DH500 F X 1/8 in. NPT M or DH500 F x 1/4 in. NPT M adaptor supplied in the OPG1 accessories. Install the tube into the adaptor.



OPG1 covers a very wide range of pressures all the way up to 200 MPa (30 000 psi). It is the user's responsibility to assure that fittings and devices connected to OPG1 are rated for the pressures at which they will be used.



If the DUT connection is lower than the OPG1 oil tank, when the OUTLET valve is open and the DUT connection is open, oil will run out of the tank through the DUT connection.

© 1998-2007 DH Instruments, a Fluke Company

3.2.5 PURGING AIR FROM THE DUT/SYSTEM UNDER TEST

Air is highly compressible. Oil is not. To the extent possible, air should be purged from the system and devices that are connected to OPG1 prior to applying pressure to them. Leaving air in the DUT reduces OPG1 efficiency, increases the time required to generate pressures, increases the dangers associated with high pressure operation and makes it more difficult to set a valid zero point.

The system and/or DUTs that are connected to OPG1 can be filled with oil prior to connecting them or they can be purged using OPG1. To purge air using OPG1, open the system or DUT at the highest point possible. Close the OPG1 **OUTLET valve**. Then carefully open the **INLET valve** causing oil to be drawn from the tank and pumped into the system. Observe the oil level at the purge point. Close the **INLET valve** when oil is present at the purge point.

While purging, watch the tank oil level carefully and keep filled.

3.2.6 MEASUREMENT REFERENCE LEVEL WHEN VENTED

Generally, the test or calibration system is opened to atmosphere (zero gauge pressure) by opening the OPG1 **OUTLET valve**.

The fluid head reference level when the **OUTLET valve** is open is the top of the tank return overflow tube. This point is 258 mm (10.15 in.) above the surface on which OPG1 is sitting (see Figure 10).

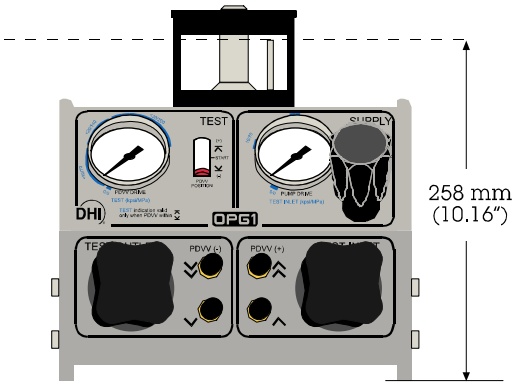

Figure 10. Fluid Head Level When Vented, **INLET Valve** Open

When the **OUTLET valve** is closed, the fluid head reference level is at the device being used as the measurement reference. Consider the possible difference in fluid head between the two conditions or incorrect fluids head corrections will be applied and the zero point will be inconsistent with other measurements.

OPG1 is designed so that the top of the oil tank return overflow tube aligns with the measurement reference level of a PG7302 oil operated piston gauge. This assures that, when using a PG7302 piston gauge, the nominal reference level is the same at zero with the OPG1 vented and when pressures are defined by the piston gauge.

When the OPG1 OUTLET valve is open, the test system is connected to the OPG1 oil tank. If there is an open point in the test system below the oil level in the oil tank, oil will run from the tank and out of the open point in the test system.

© 1998-2007 DH Instruments, a Fluke Company

3.3 TYPICAL OPERATING SEQUENCE FOR A COMPLETE CALIBRATION OR TEST

OPG1 is most often used to generate and adjust pressures to a reference measuring device and a DUT when performing a test or calibration. The reference measuring device may be a pressure monitor such as a digital indicator or gauge or a piston gauge or deadweight tester. The typical operational sequence is as follows (numerical references refer to Section 3.2, Figure 8):

❶ **Connect the DUT** to the OPG1 TEST port or to a test port on the external system to which OPG1 is connected.

❷ **Purge the DUT:** If it is not already closed, close the **OUTLET valve** (8). Open the DUT at the highest point possible. Carefully open the **INLET valve** (5) and observe the purge point in the test system until oil is present there. Close the **INLET valve**.

❸ **Position the PDVV plunger:** Open the **OUTLET valve** (8). Use the **PDVV (+) valves** (6) and **PDVV (-) valves** (7) and the **PDVV POSITION indicator** (2) to position the PDVV plunger at the **START** position or at another desired position (for example near the minimum end of stroke if the PDVV is to be used extensively for pressure generation).

❹ **Set the pump drive pressure:** Adjust the **DRIVE SET regulator** (4) and observe the pressure on the **PUMP DRIVE gauge** (3). Set the pressure so that the pump oil pressure output will be just under the maximum pressure to be reached in the test.

❺ **Take the starting zero reading on the DUT:** With the **OUTLET valve** (8) open, the pressure in the test system is zero gauge and the fluid head reference level is the top of the oil tank return overflow tube.

❻ **Set ascending test pressures:** Carefully open the **INLET valve** (5) and control the oil input from the pump to set the pressure in the test system just under the desired test point. Then use the **PDVV (+) valves** (6) and **PDVV (-) valves** (7) to adjust the pressure to the exact test pressure desired or, if the reference is a piston gauge, to float the piston gauge piston. Repeat this process for all of the ascending increments. If the increments are small enough for the PDVV displacement to generate the pressure, only the **PDVV (+) valves** may be needed to generate the next pressure. If the PDVV runs out of stroke, use the **INLET valve** to generate pressure.

❼ **Set descending test pressures:** Very carefully open the **OUTLET valve** (8) and control the oil return to the tank to set the pressure in the test system just over the desired test point. Then use the **PDVV (+) valves** (6) and **PDVV (-) valves** (7) to adjust the pressure to the exact test pressure desired or, if the reference is a piston gauge, to float the piston gauge piston. Repeat this process for all of the descending increments. If the increments are small enough for the PDVV displacement to generate the pressure, only the **PDVV (-) valves** may be needed to generate the next pressure. If the PDVV runs out of stroke, use the **OUTLET valve** to reduce pressure.

❽ **Vent the system and disconnect the DUT:** Open the **OUTLET valve** (8) fully. Disconnect the DUT. If the test port is lower than the oil level in the oil tank, be sure to close the **OUTLET valve** so that oil does not run out of the tank through the test port.

 © 1998-2007 DH Instruments, a Fluke Company

NOTES

DH Instruments
A Fluke Company

4. MAINTENANCE ADJUSTMENTS AND CALIBRATION

4.1 PRODUCT OVERVIEW

OPG1 was designed for maintenance free operation. The hydropneumatic pump and PDVV are permanently lubricated. No maintenance is required other than:

- **Maintain oil level in tank:** Replace lost oil to never allow the tank to empty which would cause the pump to run without oil (see Section 4.2).
- **Replace oil and purge hydraulic system when oil becomes dirty:** Over time, contamination from the system to which OPG1 is connected may cause the oil to become contaminated. It should then be replaced and the OPG1 hydraulic system may be purged (see Section 4.3).
- **Clean/replace filter elements on PDVV and hydropneumatic pump drive air filters:** The filters may become contaminated and restrict the free flow of drive air pressure. They should then be cleaned or replaced (see Section 4.4).

Maintenance and repair services for OPG1 are offered by authorized DHI Authorized Service Providers (see Section 6.2, Table 4).

OPG1 is a sophisticated pressure generation and adjusting instrument with advanced features and functions. Before assuming that unexpected behavior is caused by a system defect or breakdown, use this manual and other training facilities to become thoroughly familiar with OPG1 operation. For rapid troubleshooting assistance in specific situations, see Section 5.1.

OPG1 is covered by a limited one year warranty (see Section 6.2). Unauthorized service or repair during the warranty period is undertaken at the owner's risk and may cause damage that is NOT covered under product warranty and/or may void the product warranty.

4.2 FILLING THE TANK

The oil level in the OPG1 tank should be maintained at all times. Opening the **INLET valve** and operating the hydropneumatic pump when the tank is empty will cause the pump to draw air and lose its prime.

To fill the oil tank, proceed as follows (numerical references refer to Figure 11):

❶ Unscrew the tank cover/oil fill funnel (2) until a gap for oil passage can be seen between the TEST port shaft (1) and the cover.

❷ Using the tank cover as a funnel, pour oil into the tank to just under the top of the overflow tube (3). DO NOT bring the oil level in the tank above the top of the overflow tube.

❸ Leave the tank cover open to allow oil to drain from the cover into the tank when swapping DUTs and to allow air to escape from the tank when venting oil back into the tank.

© 1998-2007 DH Instruments, a Fluke Company

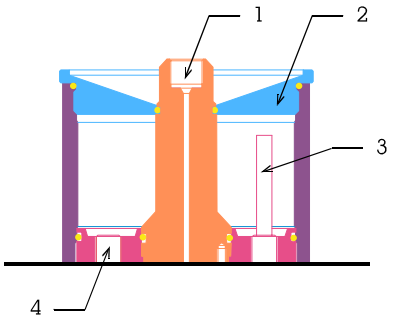

1. TEST Port
2. Tank Cover/Oil Fill Funnel (screws off)
3. Oil Return Overflow Tube (oil return)
4. Pump Draw (oil outlet)

Figure 11. Oil Tank

4.3 REPLACING OIL AND PURGING CONTAMINATED OIL

If OPG1 is used to generate and adjust pressure into test systems and DUTs that are not clean, the oil returned to OPG1 will be contaminated.

Observe the oil in the OPG1 tank. If its color is significantly different from the color of clean oil or if any particulate contamination can be observed, replace the oil in the oil tank and purge the OPG1 oil system.

To replace the oil in the oil tank, proceed as follows:

❶ Fully remove the oil tank cover by unscrewing it (rotating CCW) and removing it completely.

❷ Remove the oil from the tank with a suction bulb or similar device.

❸ Clean out the tank with paper towels or rags. Remove all particulates that may be present.

❹ Refill the tank with fresh oil to just under the overflow tube.

To purge OPG1 of dirty oil, proceed as follows:

❶ Fill the oil tank with clean oil (see Section 4.2).

❷ Open one of the side **TEST** ports and put a cup under the port.

❸ Close the **OUTLET valve**. Open the **INLET valve** causing the pump to cycle and oil to be drawn from the tank and expelled from the open **TEST** port. Observe the oil coming out of the test port until it runs clean. TAKE CARE to not allow the oil level in the tank to run out or the pump will draw air and lose its prime, requiring it to be reprimed (see Section 2.4.3). When the oil coming out the **TEST** port is running clean, close the **INLET valve**.

❹ Repeat from Step ❶, if necessary, until the oil running out the **TEST port** runs clean and the oil in the tank is clean.

4.4 CLEANING/REPLACING DRIVE AIR FILTER ELEMENTS

There are filters on the OPG1 drive air inlet ports, one on the **PDVV DRIVE port** and the other on the **DRIVE port**. If the drive air supplied is excessively dirty, these filters may become contaminated and restrict air flow to the PDVV and/or hydropneumatic pump (see Section 3.1, Figure 7).

The drive air filters are filter bodies with scintered elements. To clean or replace the drive air filters the filter body must be removed from OPG1.

© 1998-2007 DH Instruments, a Fluke Company

To remove and reinstall the drive air filters, proceed as follows:

❶ Close the OPG1 tank cover fully and plug all hydraulic ports. Ensure that tank is filled to just under oil return tube.

❷ Place the OPG1 back down on the bench, so that the front panel is up with the open bottom towards you.

❸ Disconnect the filter connection fittings (2, 4) for the **PDVV DRIVE** filter (3) and (8, 10) for **DRIVE** filter (9). Remove the filter (3) and/or (9).

❹ To reinstall the filter, make the filter connections (2) and (4) or (8) and (10). Take care to ensure that the filter is oriented in the correct direction (determined by the arrow on the filter body). The two filters are identical.

❺ Connect recommended pressures (see Section 2.3.1.2, Table 2) to the **PDVV DRIVE** port and **DRIVE** port. Check new connections for leaks using a liquid leak detector. Correct leaks, if present.

The filters may be replaced completely, cleaned by back flushing or disassembled and the filter element cleaned or replaced.

To disassemble the filter body, open the body by unscrewing the filter body cap CCW. Once the filter body cap is removed, the scintered filter element can be removed.

TWO INDEPENDENT PNEUMATIC POWER CONNECTIONS
(AS DELIVERED)

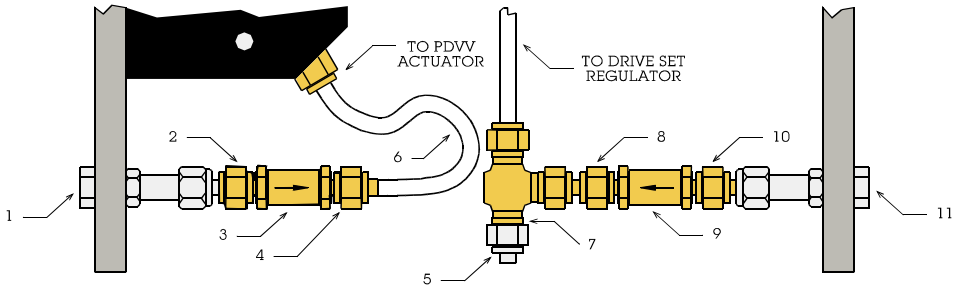

1. PDVV DRIVE Port (use optional)
2. PDVV DRIVE Filter Upstream Connection
3. PDVV DRIVE Filter
4. PDVV DRIVE Filter Downstream Connection
5. Cap
6. PFA PDVV Supply Tube
7. DRIVE Tee PDVV Connection
8. DRIVE Filter Downstream Connection
9. DRIVE Filter
10. DRIVE Filter Upstream Connection
11. DRIVE Port

Figure 12. Drive Air Filters

© 1998-2007 DH Instruments, a Fluke Company

NOTES

DH Instruments
A Fluke Company

5. TROUBLESHOOTING

5.1 OVERVIEW

OPG1 is a sophisticated pressure generating and adjusting instrument with advanced features and functions. Before assuming that unexpected behavior is caused by a system defect or breakdown, the operator should use this manual and other training facilities to become thoroughly familiar with OPG1 operation. This troubleshooting guide is intended as an aid in identifying the cause of unexpected OPG1 behavior and determining whether the behavior is due to normal operation or an internal or external problem.

Identify the symptom or unexpected behavior you are observing from the **SYMPTOMS** listed in Table 3. A **PROBABLE CAUSE** is provided and a **SOLUTION** is proposed including references to manual sections that provide information that may be of assistance.

Table 3. OPG1 Troubleshooting Checklist

SYMPTOM	PROBABLE CAUSE	SOLUTION
Test pressure continuously increases even with all valves closed.	Leak in **INLET valve** or leak in **PDVV (+) valve(s)**.	Isolate leak to **INLET valve** or **PDVV (+) valve(s)** by checking whether pressure continues to increase when **PDVV (-) valves** are opened or PDVV is at end of stoke. Replace or repair valve(s) if qualified to do so. Contact **DHI** Authorized Service Provider (7.2).
Test pressure continuously decreases even with all valves closed.	Leak in **OUTLET valve**, leak in **PDVV (-) valve(s)** or pneumatic circuit, leak in OPG1 hydraulic circuit or leak in test volume to which OPG1 is connected.	Identify and correct leak in test volume if present. Isolate leak to **OUTLET valve** or **PDVV (-) valve(s)** by checking if pressure continues to decrease when PDVV is in minimum end of stroke position. Replace or repair valve(s) if qualified to do so. Contact **DHI** Authorized Service Provider (7.2).
Test pressure takes too long to stabilize or will never stabilize.	You are observing normal evolution of pressure in an uncontrolled static volume, excess gas in hydraulic circuit.	Reduce test volume. Increase stability of test tubing and vessels. Wait longer for stability. Overshoot test point and return to reduce stabilization time. Reduce reference reading resolution to appropriate level.
PDVV will not increase pressure.	PDVV is at maximum end of stroke position, PDVV supply pressure is not high enough, or PDVV supply plugged.	Verify PDVV piston position and readjust if necessary. Use **INLET valve** to increase pressure. Increase pneumatic supply pressure. Clean filter (3.2.3).
PDVV will not decrease pressure.	PDVV is at minimum end of stroke position.	Verify PDVV piston position and readjust if necessary. Use **OUTLET valve** to decrease pressure (3.2.3).
Opening **INLET valve** does not increase pressure.	Pump drive pressure too low.	Adjust pump drive pressure, increase pneumatic supply pressure if necessary (3.2.1, 2.3.1.2, Table 2).
Pump cycles continuously without generating pressure.	The pump has lost its prime, oil tank empty.	Purge and prime pump (2.4.3).
Pump cycles continuously without generating pressure.	**OUTLET valve** is open.	Close **OUTLET valve** (3.2.2).
Pump cycles continuously without generating pressure.	There is a large leak in the test system to which OPG1 is connected.	Identify and correct leak in test system.
Pump cycles excessively before beginning to generate pressure.	The test volume to which OPG1 is connected has not been purged of air and pump is filling test volume and compressing air.	Purge air from test system before generating pressure (3.2.5).

© 1998-2007 DH Instruments, a Fluke Company

SYMPTOM	PROBABLE CAUSE	SOLUTION
Oil is leaking out of an open point in the test system.	The open point in the test system is below the OPG1 tank and the **OUTLET valve** is open so oil is running out from the tank.	Operation is normal. Be sure to keep the **OUTLET valve** closed when any point at a lower height than the OPG1 tank is open.
Pressure is not returning to zero when the **OUTLET valve** is opened.	There is air in the OPG1 and/or system under test.	Purge air from the OPG1 and/or system under test. Disconnect the DUT at the test port to zero the DUT.

© 1998-2007 DH Instruments, a Fluke Company

DH Instruments
A Fluke Company

6. APPENDIX

6.1 OPG1 TERMS, LABELS, AND SYMBOLS (GLOSSARY)

⩔, ⌄	Fast ⩔ and slow ⌄, PDVV (-) valves. Used to decrease pressure and for fine pressure adjustment.
⩓, ⌃	Fast ⩓ and slow ⌃, PDVV (+) valves. Used to increase pressure and for fine pressure adjustment.
CW	Clockwise
CCW	Counter-clockwise
Collar	The DH500 fitting element that is threaded onto the tube and provides a surface for the gland to push against.
DH500	High pressure, gland and collar type fitting for 1/4 in. (6.35 mm) coned and left hand threaded, stainless steel, tubes. DH500 is equivalent to AE F250C, HIP HF4, etc.
DRIVE SET Regulator	Self venting regulator used to regulate the drive air (pneumatic power) to the hydropneumatic pump. Sets maximum inlet pressure.
DUT	Device or System Under Test. The device that is connected to OPG1 to be tested or calibrated.
Gland	The "jam nut" in a DH500 fitting that pushes the collar on the tube into the seat.
Hydropneumatic Pump	Pneumatically operated, gate valve controlled, piston pump used to supply high pressure oil to the INLET valve.
INLET Valve	Progressive, half-turn, needle valve used to admit oil from the hydropneumatic pump into the test system. Used to generate pressure and for rough pressure adjustment.
OUTLET Valve	Progressive, half-turn, needle valve used to return oil from the test system to the oil tank. Used to release pressure and for rough pressure adjustment.
PDVV (Pneumatically Driven Variable Volume)	A pneumatically actuated plunger in a cylinder used to increase and decrease the volume of the oil test system and provide fine adjustment of the test pressure.
PDVV (+) Valves	Momentary, push button actuated, poppet valves that admit air drive pressure to the PDVV actuator causing the PDVV plunger to move forward, compressing oil and increasing the test pressure. Used to increase pressure and for fine pressure adjustment.
PDVV (-) Valves	Momentary, push button actuated, poppet valves that release air drive pressure from the PDVV actuator causing the PDVV plunger to move back, decompressing oil and decreasing the test pressure. Used to decrease pressure and for fine pressure adjustment.
PDVV DRIVE Gauge	Analog gauge that indicates the PDVV actuator air pressure and the approximate corresponding oil test pressure.
PUMP DRIVE Gauge	Analog gauge that indicates the pump drive air pressure and the approximate corresponding pump oil output pressure.
Test Pressure	The oil pressure in the OPG1 PDVV, at its TEST connections and in the system to which the OPG1 is connected.

© 1998-2007 DH Instruments, a Fluke Company

6.2 WARRANTY STATEMENT

Except to the extent limited or otherwise provided herein, **DH Instruments, a Fluke Company** (**DHI)** warrants for one year from purchase, each new product sold by it or one of its authorized distributors, only against defects in workmanship and/or materials under normal service and use. Products which have been changed or altered in any manner from their original design, or which are improperly or defectively installed, serviced or used are not covered by this warranty.

DHI and any of its Authorized Service Providers' obligations with respect to this warranty are limited to the repair or replacement of defective products after their inspection and verification of such defects. All products to be considered for repair or replacement are to be returned to **DHI**, or its Authorized Service Provider, freight prepaid, after receiving authorization from **DHI** or its Authorized Service Provider. The buyer assumes all liability vis-à-vis third parties in respect of its acts or omissions involving use of the products. In no event shall **DHI** be liable to purchaser for any unforeseeable or indirect damage, it being expressly stated that, for the purpose of this warranty, such indirect damage includes, but is not limited to, loss of production, profits, revenue, or goodwill, even if **DHI** has been advised of the possibility thereof, and regardless of whether such products are used individually or as components in other products.

Items returned to **DHI** under warranty claim but determined to not have a defect covered under warranty or to not have a defect at all are subject to an evaluation and shipping charge as well as applicable repair and/or calibration costs.

The provisions of this warranty and limitation may not be modified in any respect except in writing signed by a duly authorized officer of **DHI.**

The above warranty and the obligations and liability of **DHI** and its authorized service providers exclude any other warranties or liabilities of any kind.

Table 4. DHI Authorized Service Providers

DH INSTRUMENTS, A FLUKE COMPANY WWW.DHINSTRUMENTS.COM AUTHORIZED SERVICE PROVIDERS			
COMPANY	**ADDRESS**	**TELEPHONE, FAX & EMAIL**	**NORMAL SUPPORT REGION**
DH Instruments, a Fluke Company	4765 East Beautiful Lane Phoenix AZ 85044-5318 USA	Tel 602.431.9100 Fax 602.431.9559 cal.repair@dhinstruments.com	Worldwide
Minerva Meettechniek B.V.	Chrysantstraat 1 3812 WX Amersfoort the NETHERLANDS	Tel (+31) 33.46.22.000 Fax (+31) 33.46.22.218	info@minervaipm.com
Nippon CalService, Inc.	2-9-1 Sengen, Tsukuba-Shi Ibaraki Prefecture 305 JAPAN	Tel 0298-55-8778 Fax 0298-55-8700 n-calservice@ohtegiken.co.jp	Japan/Asia
DH Products Technical Service Division	National Institute of Metrology Heat Division Pressure & Vacuum Lab NO. 18, Bei San Huan Donglu Beijing 100013 PR CHINA	Tel 010-64291994 ext 5 Tel 010-64218637 ext 5 Fax 010-64218703 cxcen@mx.cei.gov.cn	Peoples Republic of China

© 1998-2007 DH Instruments, a Fluke Company