FLUKE®
Calibration

Rack Mount Kit for PPC4, P/N 3338072, includes:

DESCRIPTION	QTY	PART NO.
Front Support Bracket	2	3349731
Spacer	6	3387100
M5 x 25 Screw	6	3387117
Rear Support Bracket	2	3349722

Introduction

This kit provides the brackets and hardware necessary to install a PPC4 pressure controller/calibrator into a rack system. This document contains instructions for installing the brackets.

Installation Instructions

In order to access and remove the 6 side plugs for the brackets to be installed, the PPC4 chassis cover must be removed.

⚠⚠ Warning

To avoid electric shock, disconnect mains power before removing the chassis cover.

❶ **Remove the chassis cover:** Unscrew the eight screws that are on the top, right and left edges of the PPC4 rear panel.

❷ **Back the cover from the closed and secure position:** Using the two M3 x 20 mm screws in the PPC4 accessory kit, gradually back the cover from the closed position using both screws (See Figure 1). The cover is moved back by about 10 mm (.04 inch).

❸ **Lift the cover off the chassis:** Remove or retract the two screws and lift off the cover from the PPC4 chassis (See Figure 1). Take out the six side plugs and replace the cover.

❹ **Remove the four feet:** Stand the PPC4 on it's side to remove the feet.

⚠ Warning

Do not lay the PPC4 on the rotate-and-click knob located on the front panel. (See Figure 2)

Insert a 6 mm diameter round screwdriver into the hole marked "Release Tab" on the feet and pry inward. The feet will snap off (See Figure 2).



Figure 1: Removing the PPC4 Chassis Cover

❺ **Attach the front support brackets:** Drop in spacers (x6) where the side plugs were. Place one front support bracket (x2) on each side of the PPC4. Position each bracket with the 3 holes on the side. Attach brackets to sides using the M5 x 25 screws into the spacers (See Figure 3).

❻ **Attach the rear support brackets:** Place one rear support bracket (x2) on the back of the PPC4. Position each bracket by lining up with the appropriate holes on the back of the PPC4. Attach brackets (x2) to the PPC4 back panel using four (4) of the PPC4 rear panel screws (See Figure 3).

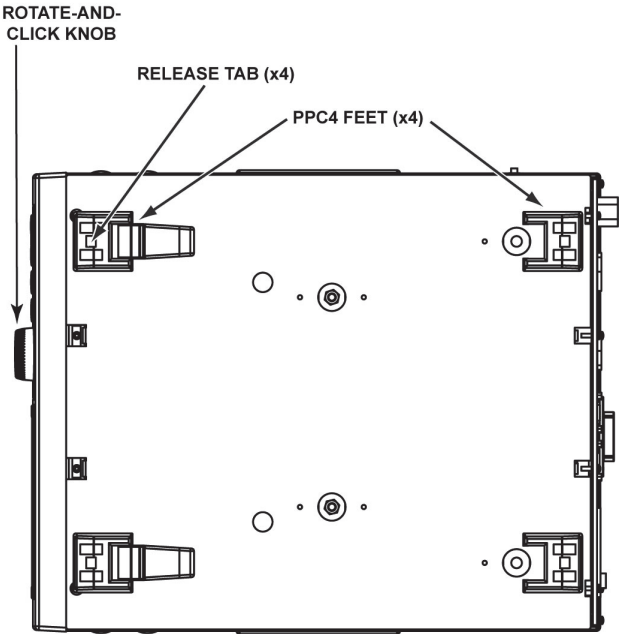

Figure 2: Removing Feet from PPC4

PN 3349779
April 2014
© 2014 Fluke Corporation. All rights reserved. Specifications are subject to change without notice.
All product names are trademarks of their respective companies.

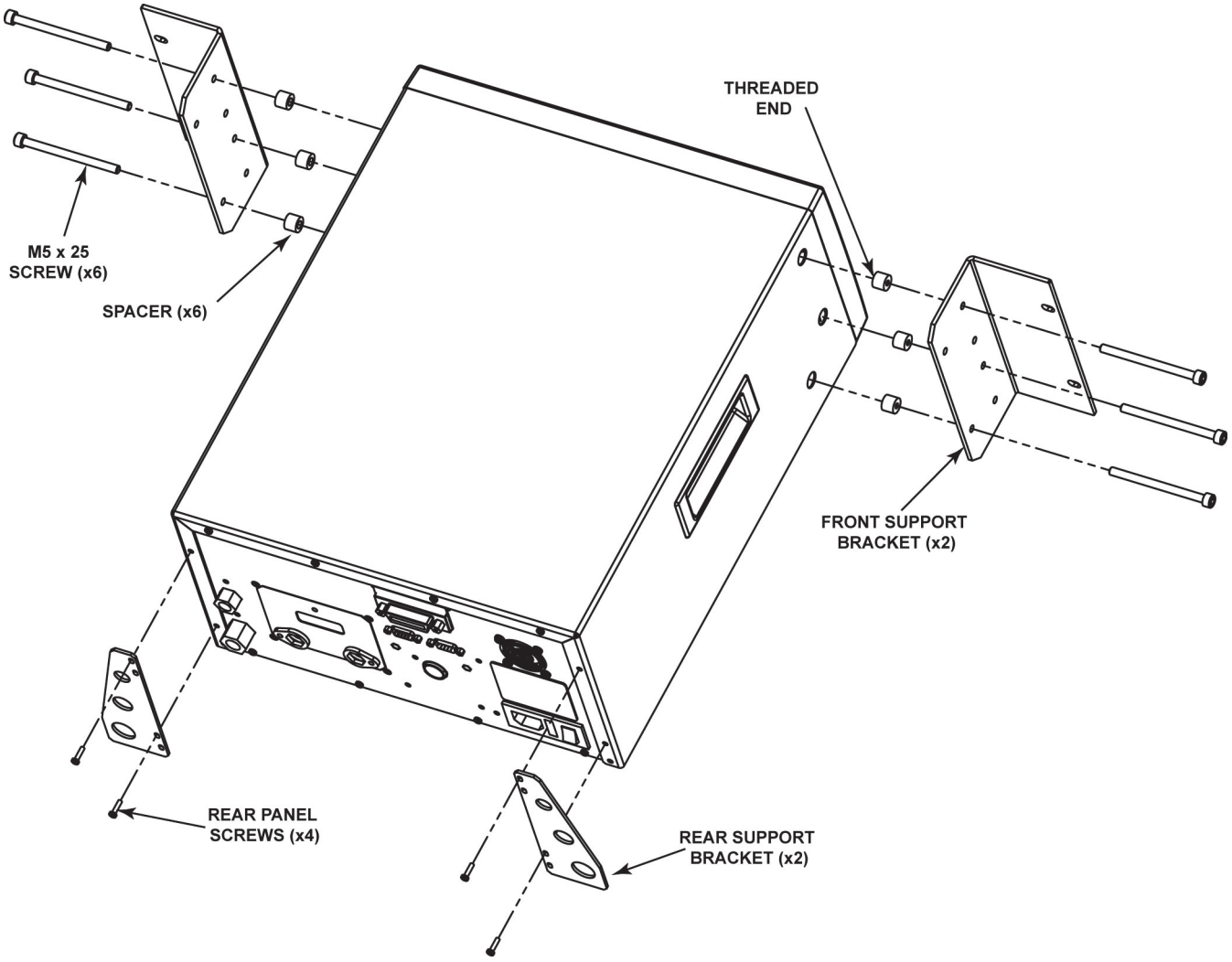

Figure 3: Installing the PPC4 Brackets

❼ For adequate support of the PPC4, the rear support brackets shall be supported on the side rails of the rack system or by other means.